PUBLIC REVIEW DRAFT

COUNTYWIDE WATER SERVICE REVIEW

Prepared for:

Local Agency Formation Commission
of
Santa Clara County
70 West Hedding Street, 11th Floor
San Jose, California 95110

Prepared by:

Dudek and Associates, Inc.
605 Third Street
Encinitas, California 92024

March 2005

TABLE OF CONTENTS

1. EXECUTIVE SUMMARY 1
- A. Overview 1
- B. Service Review Purpose 3
- C. Water Service Review Process 4
- D. Water Supply System 4
- E. Issues and Trends 6
- F. Report Structure 11

2. SPECIAL DISTRICTS 12
- A. Santa Clara Valley Water District 13
- B. Aldercroft Heights County Water District 36
- C. Purissima Hills County Water District 43
- D. San Martin County Water District 53
- E. Pacheco Pass Water District 68
- F. Guadalupe-Coyote Resource Conservation District 71
- G. Loma Prieta Resource Conservation District 83

3. CITY WATER AGENCIES 93
- A. City of GIlroy 94
- B. City of Milpitas 105
- C. City of Morgan Hill 114
- D. City of Mountain View 124
- E. City of Palo Alto 132
- F. San Jose Municipal Water System 143
- G. City of Santa Clara 154
- H. City of Sunnyvale 164

4. PRIVATE WATER PURVEYORS 174
- A. California Water service Company 175
- B. Great Oaks Water Company 178
- C. San Jose Water Company 180
- D. Stanford University 185
- E. West San Martin Water works, Inc. 193

5. RELATED AGENCIES 197
- A. San Francisco Public Utilities Commission 198
- B. Bay Area Water Supply and Conservation Agency 201

6. GLOSSARY 204

7. APPENDICES 206
- A. Water System Regulations for Santa Clara County 207
- B. Recycled Water 212
- C. Agency Profiles 214

ACRONYMS

ABAG	Association of Bay Area Governments
AF	Acre foot
BAWSCA	Bay Area Water Supply and Conservation Agency
Cal Water	California Water Service Company
CCF	Hundred cubic feet
CIP	Capital Improvements Plan (or Program)
CPUC	California Public Utilities Commission
CVP	Central Valley Project (Federal)
DHS	State Department of Health Services
ERAF	Educational Revenue Augmentation Fund
FTE	Full Time Equivalents (full time staff)
GIS	Geographic Information System
GPCD	Gallons per capita per day
GPM	Gallons per minute
IWRP	Integrated Water Resources Plan
LAFCo	Local Agency Formation Commission
MGD	Million gallons per day
MOU	Memorandum of Understanding
NA	Not Applicable
NP	Not Provided
NRCS	Natural Resources Conservation Service (under the US Department of Agriculture)
RCD	Resource Conservation District
SBWR	South Bay Water Recycling
SCADA	Supervisory Control and Data Acquisition
SCVWD	Santa Clara Valley Water District
SFPUC	San Francisco Public Utilities Commission
SJWC	San Jose Water Company
SOI	Sphere of Influence
SWP	State Water Project
TAC	Technical Advisory Committee
USA	Urban Service Area
UGB	Urban Growth Boundary

Cover Photos:

Upper Lower Reach of Guadalupe Creek
Photo L. Johmann © 2000 (Guadalupe-Coyote RCD)

Guadalupe Creek, courtesy of the Santa Clara Valley Water District

Uvas Reservoir, courtesy of the Santa Clara Valley Water District

Lower Coyote Creek (Downstream of Hwy 101)
Photo L. Johmann © 2004 (Guadalupe-Coyote RCD)

1. EXECUTIVE SUMMARY

Overview

Service Review Purpose

Water Service Review Process

Issues and Trends

Report Structure

A. OVERVIEW

The Countywide Water Service Review is a comprehensive overview of water service within Santa Clara County and includes all of the public agencies providing water service in the County as well as several private purveyors. In addition, the San Francisco Public Utilities Commission (SFPUC) and the Bay Area Water Supply and Conservation Agency are included since the water imported through the SFPUC's Hetch Hetchy Water System is an integral component of the water supply in Santa Clara County. The Pacheco Pass Water District is included as well; its service area lies only partially within Santa Clara County, but it is providing water for natural groundwater recharge that benefits both Santa Clara and San Benito Counties.

Due to the County's groundwater resources, a significant number of mutual water companies, small shared systems, and private and shared wells are also providing water service. These facilities are privately owned, and it is beyond the scope of this report to collect and analyze data on these systems. It should be noted that they are providing water service to the County's residents from the groundwater resources and are impacted by the same concerns for groundwater quality and costs as the public water providers.

In addition to water service providers, this review also includes the two Resource Conservation Districts operating within the County. They do not directly provide water service, but are involved in stewardship of the County's watersheds and environmental resources. Their efforts involve rural land management, soil conservation and creek protection and enhancement, all of which provide benefit to the County's local surface water sources.

The following water providers are included in this review:

Special Districts	Cities (water utility only)	Others
Water Agencies	Gilroy	***Private Water Purveyors***
Santa Clara Valley Water District	Milpitas	California Water Service Company
Aldercroft Heights County Water District	Morgan Hill	Great Oaks Water Company
Purissima Hills County Water District	Mountain View	San Jose Water Company
San Martin County Water District	Palo Alto	Stanford University
Pacheco Pass Water District	San Jose Municipal Water System	West San Martin Water Works, Inc.
Resource Conservation Districts	Santa Clara	***Related Agencies***
Guadalupe-Coyote Resource Conservation District	Sunnyvale	San Francisco Public Utilities Commission
Loma Prieta Resource Conservation District		Bay Area Water Supply & Conservation Agency

Following is a countywide map depicting most of the water retailers, prepared by the Santa Clara Valley Water District (SCVWD).

Insert Water Retailer Map

B. SERVICE REVIEW PURPOSE

LAFCo has authority over special districts and cities, but does not have authority over private entities (private and investor-owned water companies are subject to the authority of the California Public Utilities Commission). In accordance with Government Code §56425, LAFCo must conduct service reviews prior to or in conjunction with the mandated five-year schedule for updating Spheres of Influence (SOIs) for the agencies under its jurisdiction. The service review report must include an analysis of the issues and written determinations for each of the following:

- Growth and population projections for the affected area;
- Infrastructure needs or deficiencies;
- Financing constraints and opportunities;
- Cost avoidance opportunities;
- Opportunities for rate restructuring;
- Opportunities for shared facilities;
- Government structure options, including advantages and disadvantages of the consolidation or reorganization of service providers;
- Evaluation of management efficiencies; and
- Local accountability and governance.

This Countywide Water Service Review will be available for use by LAFCO, the County, cities, special districts and the public to better understand how water service is provided within Santa Clara County.

The Service Review will be used by LAFCO to update the spheres of individual agencies (cities and special districts) including expansions or reductions in the sphere of influence (SOI) boundaries or creation of new SOIs. This report will be specifically used to update the SOI for the four water districts and the two resource conservation districts. With regard to the cities, LAFCO will use this information along with the information gathered in the Countywide Fire Service Review and the subsequent sub-regional service reviews to update the SOI of cities.

Although the service review report includes a discussion of various alternative government structures for efficient service provision, LAFCO is NOT required to initiate any boundary changes based on service reviews. LAFCO, other local agencies (including cities, special districts, and the County) or the public may subsequently use the service reviews together with additional research and analysis, where necessary, to pursue changes in jurisdictional boundaries.

LAFCO may also use the information in this service review in reviewing future proposals, and other entities as well as the public may use this report as a foundation for further study and analysis of issues relating to water supply and services within this county.

C. WATER SERVICE REVIEW PROCESS

A collaborative approach has been used throughout the preparation of the Countywide Water Service Review. The input of the public agencies and private purveyors is highly valued, and multiple opportunities were provided for their involvement. At the outset, Santa Clara LAFCo formed a Technical Advisory Committee (TAC) to provide input and guidance on the process. The TAC includes members from a number of the agencies, representing both North and South County interests as well as private purveyors. The TAC has met three times over a period of several months to discuss issues, process and report status.

A service review questionnaire was prepared by Santa Clara LAFCo with the assistance of the Santa Clara Valley Water District (SCVWD). It was distributed to the agencies for their completion. The data was collected and forwarded to the consulting team for review; follow-up interviews were then conducted with agency staff. Agencies were provided an opportunity to review their individual sections, and a copy of the preliminary report and determinations were provided to the TAC for review. Changes and comments were incorporated as appropriate in preparation for release of the Public Review Draft.

D. WATER SUPPLY SYSTEM

Santa Clara County relies on three main sources of water: groundwater from the Santa Clara Valley Basin, local surface water from creeks and streams, and imported water delivered through the Hetch Hetchy Water System, the State Water Project, and the Central Valley Project. Each of these resources is integral to the overall supply, although there are distinct differences in the sources available within the County's sub-regions. The South County is entirely dependent on groundwater for its potable supply, making the groundwater contamination and treatment issues even more critical. There are currently no other potable water supply alternatives in the South County area. The North County utilizes all three sources – groundwater, local surface water and imported water – although the amount supplied by each source varies by locale.

The two primary wholesale water agencies serving the County are the Santa Clara Valley Water District (SCVWD) and the San Francisco Public Utilities Commission (SFPUC). The SCVWD treats local and imported surface water for further distribution to the water retailers. The District is the designated groundwater management agency for Santa Clara County and is responsible for managing the groundwater resources including all natural and artificial recharge facilities. The District also partners in the County's recycled water programs and provides flood protection and services related to watershed management. The extent of the services provided by the SFPUC is delivery of treated water through the Hetch Hetchy System.

A schematic representation of the Santa Clara County water providers and water system is shown on the next page, followed by maps of the water service providers in the North County and the South County.

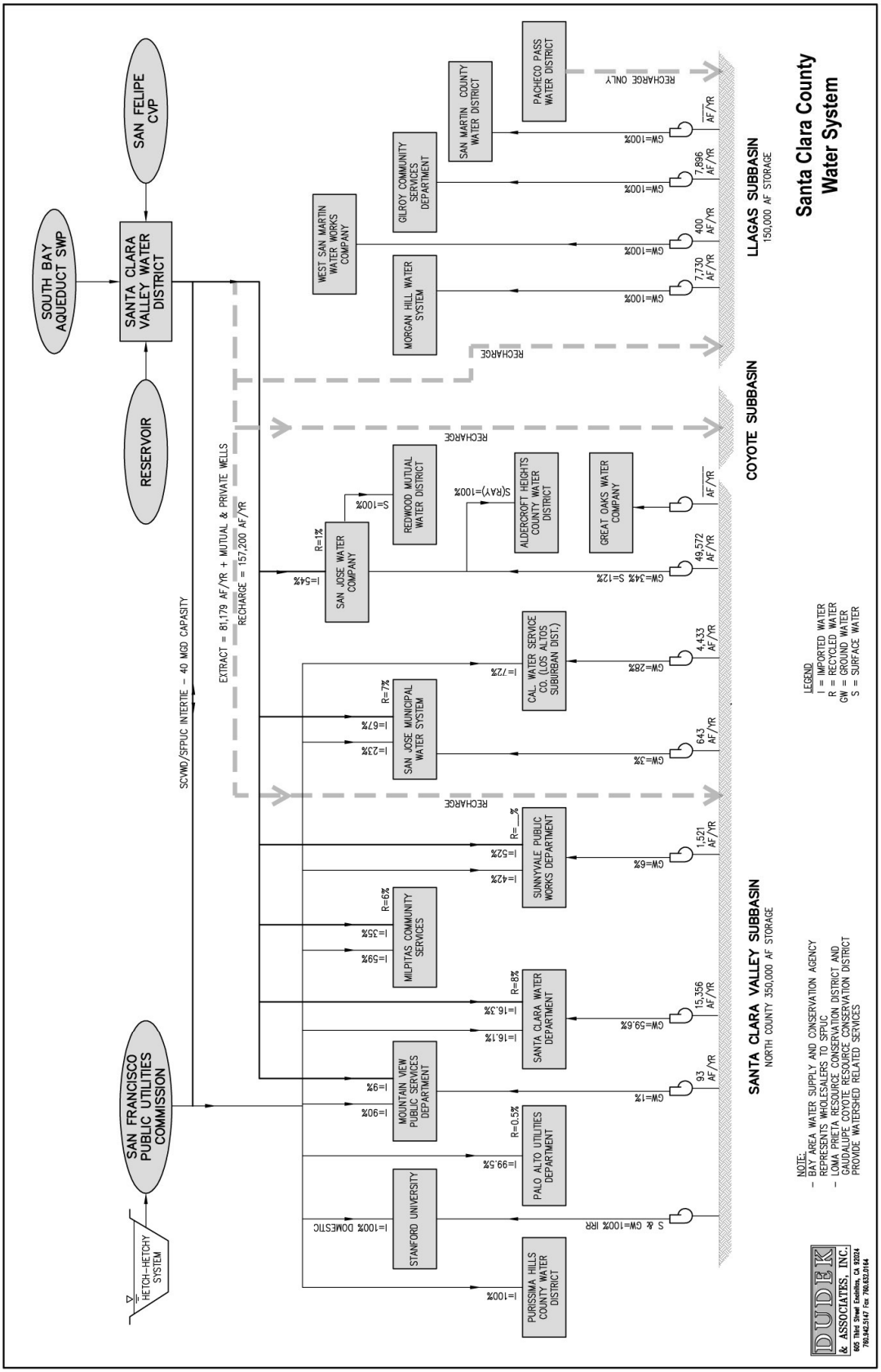
Santa Clara County Water System
SOUTH BAY AQUEDUCT SWP
SAN FELIPE CVP
SANTA CLARA VALLEY WATER DISTRICT
RESERVOIR
SAN FRANCISCO PUBLIC UTILITIES COMMISSION
HETCH-HETCHY SYSTEM
SCVWD/SFPUC INTERTIE – 40 MGD CAPASITY
EXTRACT = 81,179 AF/YR + MUTUAL & PRIVATE WELLS
RECHARGE = 157,200 AF/YR
LLAGAS SUBBASIN
150,000 AF STORAGE
COYOTE SUBBASIN
SANTA CLARA VALLEY SUBBASIN
NORTH COUNTY 350,000 AF STORAGE
RECHARGE
RECHARGE ONLY
MORGAN HILL WATER SYSTEM
WEST SAN MARTIN WATER WORKS COMPANY
GILROY COMMUNITY SERVICES DEPARTMENT
SAN MARTIN COUNTY WATER DISTRICT
PACHECO PASS WATER DISTRICT
SAN JOSE WATER COMPANY
REDWOOD MUTUAL WATER DISTRICT
ALDERCROFT HEIGHTS COUNTY WATER DISTRICT
GREAT OAKS WATER COMPANY
CAL. WATER SERVICE CO. (LOS ALTOS SUBURBAN DIST.)
SAN JOSE MUNICIPAL WATER SYSTEM
SUNNYVALE PUBLIC WORKS DEPARTMENT
MILPITAS COMMUNITY SERVICES
SANTA CLARA WATER DEPARTMENT
MOUNTAIN VIEW PUBLIC SERVICES DEPARTMENT
PALO ALTO UTILITIES DEPARTMENT
STANFORD UNIVERSITY
PURISSIMA HILLS COUNTY WATER DISTRICT
7,730 AF/YR
400 AF/YR
7,896 AF/YR
49,572 AF/YR
4,433 AF/YR
643 AF/YR
1,521 AF/YR
15,356 AF/YR
93 AF/YR
GW=100%
GW=34% S=12%
GW=28%
GW=3%
GW=6%
GW=59.6%
GW=1%
S & GW=100% IRR
I=54%
R=1%
S=100%
S(RAY)=100%
I=72%
I=67%
I=23%
R=7%
I=52%
I=42%
R=__%
I=59%
I=55%
R=6%
I=16.3%
I=16.1%
R=8%
I=9%
I=90%
I=99.5%
R=0.5%
I=100% DOMESTIC
I=100%
LEGEND
I = IMPORTED WATER
R = RECYCLED WATER
GW = GROUND WATER
S = SURFACE WATER
NOTE:
– BAY AREA WATER SUPPLY AND CONSERVATION AGENCY REPRESENTS WHOLESALERS TO SFPUC
– LOMA PRIETA RESOURCE CONSERVATION DISTRICT AND GAUDALUPE COYOTE RESOURCE CONSERVATION DISTRICT PROVIDE WATERSHED RELATED SERVICES
DUDEK & ASSOCIATES, INC.
605 Third Street Encinitas, CA 92024
760.942.5147 Fax 760.632.0164

Insert North County Map

Insert South County Map

E. ISSUES AND TRENDS

There are a number of issues and trends affecting water service within Santa Clara County. Water service is rarely static, and as environmental concerns increase and technology advances, changes in the approach to water supply, demand and delivery will occur. Although the County's water resources are managed effectively, actions at the State and Federal level for water supply allocations delivered through the Central Valley Project and State Water Project, groundwater contamination remediation and regulatory requirements will ultimately impact water service in the County. These issues and trends should be noted and factored into future decisions where appropriate. The following is a summary of the major issues and trends identified in the Countywide Water Service Review process:

South County Water Supply

The South County sub-region overlies the Llagas Sub-basin, one of three sub-basins in the Santa Clara Valley. The Santa Clara Valley Groundwater Basin is not adjudicated, meaning no legally prescribed groundwater pumping rights have been established. The SCVWD is the recognized groundwater management agency in Santa Clara County, is responsible for managing the supply to ensure that the basins are replenished. In the South County this is accomplished through natural recharge as well as the use of raw imported Central Valley Project water. Studies have shown that the groundwater basins have been overdrafted in the past. However, most of the basins recover during wet years, and it has not been necessary to implement overdraft or perennial yield concepts.

The South County water providers are entirely dependent on groundwater for potable supply. Each agency has its own independent system of wells, pumping facilities and storage, and there are no interconnections between the public agency systems. The SCVWD's Santa Clara Conduit extends through the South County region, carrying untreated Central Valley Project water from the San Luis Reservoir to northern Santa Clara County. The first water treatment facility is located north of Morgan Hill. The infrastructure requirements that would be needed to provide treated surface supply in the South County have made this source cost prohibitive in the past.

Growth within the South County will naturally result in increased demand for potable water. With cost increases for groundwater cleanup and escalating pump taxes, imported water may become a viable supplemental alternative to the potable supply at some point in the future. If this source of water supply is made available in the South County, it will be imperative that the public and private water providers are working cooperatively on the overall management of the region's water resources.

South County Groundwater Quality

The quality of the groundwater in the South County is at risk, both from nitrate levels due to septic systems and surrounding agricultural land use as well as from perchlorate contamination from past manufacturing operations. The situation is dire in portions of the unincorporated area of San Martin; the Cherry Ranch Mutual Water Company has been ordered by the State Department of Health Services to disconnect its system due to high nitrate levels and there are others facing similar circumstances. Due to

the extent of the contamination and the physical requirements for treatment facilities, treatment is more appropriately provided through a public agency supplying a number of connections rather than individual wells or small mutual water companies.

The South County water agencies are collaborating in several ways on the groundwater quality issue. The Cities of Gilroy and Morgan Hill and the SCVWD are part of the Perchlorate Working Group, which is in the process of developing a mitigation plan and actively pursuing government funding assistance as well as restitution from the Olin Corporation (the owner of the manufacturing facility believed to have caused the perchlorate contamination). The San Martin County Water District has already settled with Olin and participates in the Perchlorate Community Advisory Group, established by the Regional Water Quality Control Board. Other participants include the SCVWD, elected officials and community members. The solutions for the groundwater quality issue in the South County will be implemented through multiple channels (policy, planning, technology, and operations). Strong local government is needed along with cooperation between the water providers so that the solutions and benefits are cost-effective and sustainable, and serve the best interests of the region.

Coyote Valley Growth and Development

Plans for the future of the Coyote Valley are under development. The City of San Jose is in the process of creating the Coyote Valley Specific Plan through a public process with significant community input. The plan includes minimum development capacities of 50,000 jobs and 25,000 dwelling units to support a resident population of 80,000. Detailed analysis is being conducted on infrastructure needs and projected water demand, but it is not yet known which water providers will serve the area. The sources of water have also not been fully identified nor is it known how it will be financed. Portions of the area are not within San Jose's Urban Service Area (USA) and LAFCo approval will be needed to expand the USA boundary.

Mutual Water Companies and Privately Owned Water Systems

As mentioned earlier, there are a number of mutual water companies and privately-owned water systems providing service within the County. These entities are an important component in the overall provision of water service in the County but are not within LAFCo's purview. Mutual water companies are a legal entity with no specific requirement for the size of the system or number of connections. It essentially means that there are shared interests in the water system and service. Mutual water companies may or may not be subject to the authority of the California Public Utilities Commission, depending on certain service parameters.

Water systems are classified and regulated differently based on the number of connections. Per records of the California Department of Health Services and the County Department of Environmental Health, there are 114 public water systems with 15 or more connections serving a total of 3,755 connections (excluding the agencies covered in this review), and 71 registered State Small Water Systems that serve 5 to 14 connections. The systems that serve fewer than 5 connections are not regulated and a complete, accurate

record was not available. All entities extracting groundwater are required to pay the pumping tax imposed by the SCVWD because they benefit from the groundwater management services provided by the District.

Smaller water mutuals, privately operated systems, and individual well owners typically do not have the facilities to treat groundwater other than disinfection at the wellhead. When these systems are impacted, they often seek the assistance of a larger public or private provider in the area that could extend service. The State Department of Health Services is not in favor of point-of-use treatment systems, and is encouraging small water systems to merge with larger providers.

This issue is particularly critical in the South County region where groundwater quality is impacted. The San Martin County Water District receives at least one inquiry for service per month, but must decline due to boundary limitations. In accordance with Government Code §56430, LAFCo will be updating the San Martin County Water District's Sphere of Influence (SOI) in the near future. It will be important to consider this situation and the long term prognosis for groundwater quality in the South County as a part of the review.

Additional information on water system regulations within Santa Clara County is included in *Appendix A*.

San Francisco Public Utilities Commission – Capital Improvements Program

The northern portion of Santa Clara County depends on imported water delivered through the San Francisco Public Utilities Commission (SFPUC) Hetch Hetchy Water System for a portion of the potable supply. In May 2002, the SFPUC approved a $3.6 billion Capital Improvement Program to repair, replace and seismically upgrade the system's infrastructure. Of that amount, approximately $715 million is designated for local projects within the City and County of San Francisco; the majority, $2.9 billion, is for regional projects that will benefit the residents of Alameda, Santa Clara and San Mateo Counties. The cost for the regional projects will be borne by the 28 water retailers within these three counties.

There is an ongoing concern for the Santa Clara County water agencies regarding cost escalation and project delays. As of November 2004 total expenditures to date for regional projects was $32 million, or 1.8% of the Program Budget. It was expected that 50% of the cost would have been expended within the first three years. Cost-to-Complete projections have also changed significantly. The original budget of $2.9 billion has escalated to $3.3 billion, an increase of $423 million. Based on the 2002 cost projections, it was estimated that the average monthly water bill for customers in the three counties would increase from $32 to $71 by 2015. It is unknown how the additional $423 million in cost will affect this.

Recycled Water

Recycled water has become a viable alternative to potable supply for landscape and industrial uses in some areas of the County. System infrastructure, treatment capacity, and distribution areas have reached

a scale that makes it cost-effective and efficient for private companies and public institutions to commit to using this source. Recycled water is produced at four wastewater treatment plants:

- South County Regional Wastewater Authority in Gilroy
- Regional Water Quality Control Plant in Palo Alto
- San Jose/Santa Clara Water Pollution Control Plant in Alviso
- Sunnyvale Water Pollution Control Plant

The SCVWD has factored recycled water into its long range planning; the production target for 2010 is 20,000 acre-feet, increasing to 44,000 acre-feet by 2020. The District owns the recycled water distribution system in the South County.

The water providers are cooperating on recycled water production and use, and capital investments are being made to expand this infrastructure. Recycled water demand is expected to increase for the foreseeable future, and it will play an increasingly important role within the County's overall water supply outlook. More information is included in *Appendix B*.

F. REPORT STRUCTURE

The Countywide Water Service Review is structured by agency type (Special Districts, Cities, Private Purveyors and Related Agencies). Included within these sections is a detailed review of each agency based on the nine areas of analysis required by Government Code §56430. Determinations are included for each of the public agencies. Profiles of the individual agencies and private companies are included in *Appendix C*.

2. SPECIAL DISTRICTS

Santa Clara Valley Water District

Aldercroft Heights County Water District

Purissima Hills County Water District

San Martin County Water District

Pacheco Pass Water District

Guadalupe-Coyote Resource Conservation District

Loma Prieta Resource Conservation District

A. SANTA CLARA VALLEY WATER DISTRICT

Overview

The Santa Clara Valley Water District (SCVWD) is the primary water resources agency for Santa Clara County. First formed as the Santa Clara Valley Water Conservation District in 1929, it now acts not only as the County's water wholesaler, but also as its flood protection agency and is the steward for its streams and creeks, underground aquifers and district-built reservoirs.

The District owns and manages 10 local surface reservoirs and associated creeks and recharge facilities, manages the County's groundwater basins and 3 water treatment plants, imports water from the Central Valley Project and the State Water Project, and delivers recycled water to parts of the County. The District is also responsible for flood protection within the County. Its stewardship responsibilities include creek restoration and wildlife habitat projects, pollution prevention efforts and a commitment to natural flood protection.

The District is an independent special district, with jurisdiction throughout Santa Clara County. The introductory paragraph of the District's enabling legislation reads:

> "*An act to create a flood control district to be called Santa Clara County Flood Control and Water District; to provide for the control and conservation of flood and storm waters and the protection of watercourses, watersheds, public highways, life and property from damage or destruction from such waters; to provide for the acquisition, retention, and reclaiming of drainage, storm, flood, and other waters and to save, conserve, and distribute such waters for beneficial use in said district; to authorize the incurring of indebtedness, the issuance and sale of bonds, and the levying and collection of taxes and assessments on property within said district and in the respective zones thereof; to define the powers of said district; to provide for the government, management, and operation of said district and for the acquisition and construction of property and works to carry out the purposes of the district, declaring the urgency thereof, to take effect immediately. The name of the Santa Clara County Flood Control and Water District Act was changed to the Santa Clara Valley Water District.*"

1. Growth and Population

Santa Clara County had an estimated population of 1,719,537 in 2003 per the State Department of Finance. ABAG projects that the population will reach 2,267,100 by 2030 with an average annual growth rate of 1.2%. The potential for future development and population growth varies significantly across the County. The highest growth rates are projected for Milpitas, San Jose and Santa Clara. This has bearing on the water service provided by the SCVWD as growth drives water demand and development patterns determine the type and capacity of future system infrastructure needs. The northern portion of the County uses treated surface water deliveries as well as groundwater while the southern portion is entirely dependent on groundwater. Local surface water and imported surface water are recharged in both areas

through District groundwater management programs, supplementing the natural groundwater supply. ABAG has projected the following population and growth rates, including unincorporated area within each city's sphere of influence:

Area	Projected 2030 Population	Annual Growth Rate
North & Central County		
Campbell	43,400	0.4%
Cupertino	60,200	0.3%
Los Altos	31,500	1.0%
Los Altos Hills	10,700	0.2%
Los Gatos	35,500	0.3%
Milpitas	91,400	1.6%
Monte Sereno	4,800	0.4%
Mountain View	89,600	1.0%
Palo Alto	92,200	1.0%
San Jose	1,339,400	1.4%
Santa Clara	142,100	1.2%
Saratoga	33,900	0.4%
Sunnyvale	159,100	0.8%
South County		
Gilroy	66,400	1.0%
Morgan Hill	50,000	0.9%
Remaining Unincorporated Area (including San Martin)	16,900	0.4%
Countywide	2,267,100	1.2%

Source: ABAG Projections 2005

ABAG's projections are slightly higher than the data included in the SCVWD's 2001 Urban Water Management Plan; however, the District monitors updated planning projections and adjusts its programs accordingly. The SCVWD has addressed the projected population growth and related increase in demand based upon ABAG's 1998 projections through its long-range planning efforts, Integrated Water Resources Planning and Urban Water Management Plan.

2. Infrastructure Needs and Deficiencies

The Santa Clara Valley Water District is the groundwater management agency and the primary water wholesaler within Santa Clara County. Its Water Utility Enterprise manages all aspects of water supply planning, including conjunctive management of surface and groundwater resources; imported water acquisitions; coordination with local, state and federal water interests; water treatment and delivery system operations; new water resources development; groundwater basin protection; infrastructure and asset management planning; emergency operations; financial, strategic and business planning; and communication. Its Watershed Operations core business is responsible for providing flood protection, ensuring clean, safe water in creeks and bays, creating healthy creek ecosystems and establishing partnerships for trails, parks and open space along waterways. In FY 2003-2004 the SCVWD completed

a major update of its Integrated Water Resources Planning studies (IWRP). The IWRP is based on a planning horizon that extends through year 2040 and is the District's primary water supply planning document.

Water Demands

Per the SCVWD's Urban Water Management Plan, overall water demand within Santa Clara County is estimated as follows: 52 % Residential, 24% Commercial and Public, 9% Agricultural, 9% Industrial and 6% other. The District sells treated water and manages the groundwater sub-basins supplying major public and private water purveyors and private well owners; and also provides water directly to agricultural users. Major retailers include the following:

Retailer	Water Use – 2003 (SCVWD supply only)
Public Agencies	
City of Milpitas	4,332 AF
City of Mountain View	1,496 AF
San Jose Municipal Water System	16,190 AF
City of Santa Clara	19,545 AF
City of Sunnyvale	12,294 AF
City of Gilroy	7,205 AF
City of Morgan Hill	7,730 AF
San Martin County Water District	137 AF
Private Water Companies	
California Water Co.	14,926 AF
Great Oaks Water Co.	12,792 AF
New Avenue Mutual Water Company	209 AF
San Jose Water Company	130,132 AF
West San Martin Water Works	388 AF

Source: SCVWD records

The SCVWD's Water Utility Enterprise Report (August 2004) lists the following water use for Calendar Year 2003:

Water Use by Source of Supply	Actual 2003 (Acre-ft/yr)	Percent of Total
I. Water Production		
In-District Groundwater Pumping	146,900	40%
District Treated Water	130,600	36%
District Surface Water Irrigation	3,000	1%
Recycled Water	600	0%
Non-District (Import, Local, & Recycled)	86,100	23%
Total Water Production	**367,200**	**100%**
II. Water Use		
District Municipal & Industrial	253,500	69%
District Agricultural	27,600	8%
Non-District (Import, Local and Recycled)	86,100	23%
Total Water Use	**367,200**	**100%**

Source: Table 2-1, WUER August 2004

Increase in demand is expected to bear some relationship to the projected residential and commuter population increase within a given area. Projected water demand in the Urban Water Management Plan for year 2020 is 435,289 acre feet per year, a 22% increase over 2003 estimates, similar to the projected increase in population. These projected demands take into account the aggressive water conservation program being implemented by SCVWD. Without the savings from these conservation programs, the estimated 2020 demands would be an additional 64,000 acre-feet.

Water Conservation

The District, as the lead agency, has been aggressively implementing water conservation programs in co-operation with its thirteen water retailers since 1992. Water conservation is a key component of the District's updated Integrated Water Resources Plan (IWRP 2003) to ensure long-term water supply reliability in Santa Clara County.

These conservation programs for residents, businesses and agriculture help meet short-term demands placed on the water supply during critical dry periods. These programs also reduce flows to area wastewater treatment facilities, mitigating environmental impacts. By 2020, the District plans to save over 64,000 acre-feet of water per year through its current baseline programs and an additional 24,000 through future conservation programs (considered building-blocks in IWRP 2003).

In 2003, savings attributable to all District conservation programs reached 31,600 acre-feet, putting the District on target to meet its IWRP 2003 conservation goals.

Water Supply

The SCVWD's Water Utility Enterprise Report (August 2004) lists the following data on annual water supply and distribution for Santa Clara County for calendar year 2003:

Supply	Actual 2003 (Acre-ft/yr)	Percent of Total
I. Annual Water Supply		
District Supply		
Imported Water to County:		
CVP Imports	106,400	30%
State Water Project Imports	76,100	21%
Total District Imports	182,500	
Local Surface Water	90,500	25%
SCRWA Recycled Water	600	0%
Non-District Supply		
Hetch Hetchy	59,400	17%
Other Reservoirs and Streams (SJWC & Stanford)	14,900	4%
Other Recycled Water	8,200	2%
Total Annual Water Supply	**356,100**	**100%**
II. Distribution of Annual Water Supply		
Distribution Within District System		
To Treated Water	130,600	37%
To Surface Water: Irrigation/Environment	24,200	7%
To Recycled Water	600	0%
To Managed Recharge		
Santa Clara Groundwater Basin	74,800	21%
Coyote & Llagas Groundwater Basin	43,400	12%
Subtotal – Distribution to District System	**273,600**	
Non-District Distribution		
Hetch Hetchy	59,400	17%
San Jose Water Company and Stanford	14,900	4%
Other Recycled Water	8,200	2%
Subtotal – Non-District Distribution	**82,500**	
Total Distribution of Annual Water Supply	**356,100**	100%

Source: Table 2-2, WUER August 2004

Per the 2001 Urban Water Management Plan, the projected long-term average supply for year 2020 ranges between 496,000 to 546,000 acre-feet.

The SCVWD's water supply system spans the length of the County from the San Francisco Bay in the north to Gilroy in the south and includes the following:

Facility	Quantity
Pipelines	142 miles
Reservoirs (Dams)	10
Total Water Storage Volume	169,415 AF
Pump Stations	3
Canals	17.3 miles (4 separate canals)
Water Treatment Plants	3
Tunnels	8.4 miles*
Groundwater Recharge Ponds	393 Acres

**Includes USBR facilities operated by SCVWD*

Local Reservoirs

The SCVWD has ten local reservoirs located throughout the county. These reservoirs are filled by stream flows and water that flows overland and is collected in the reservoirs. The average surface flow in the County is approximately 193,700 acre feet per year; however only about 91,000 acre feet can be captured and used through surface diversions or groundwater recharge. This is due to a number of factors, including recharge capacity in proximity to a given stream and capacity limits of the District's storage, recharge and conveyance facilities.

The reservoirs both store water for later use and can provide flood control protection. Stored water is used for groundwater recharge, in the creeks or off stream facilities or to supply water to the SCVWD's water treatment plants. The following summarizes the District's reservoirs:

Facility	Capacity (AF)	Year Constructed
Almaden	1,780	1935
Anderson	89,073	1950
Calero	10,050	1935
Chesbro	8,952	1955
Coyote	22,925	1936
Guadalupe	3,723	1935
Lexington	19,834	1952
Stevens Creek	3,465	1935
Uvas	9,935	1957
Vasona	400	1935
Total	**170,137**	

The largest dam operated by the SCVWD is the Anderson Reservoir located on Coyote Creek about two miles east of Morgan Hill. The reservoir includes a 240-foot high compacted earth dam. Power is generated through the Anderson Hydroelectric Facility at the reservoir outlet.

The California Department of Water Resources performs regular inspections of the District's dams for general condition as well as structural integrity. In addition, the SCVWD has a dam safety program to proactively address any issues. The District has included a number of reservoir-related projects in its

Capital Improvement Plan, including the following: dam improvements, instrumentation and dam seepage repairs; improvements or modifications to the outlet works at Almaden, Lenihan (Lexington Reservoir), Guadalupe, and Calero; and addressing bank erosion at the Anderson Reservoir. The total appropriated capital investment through 2005 is $43.6 million with additional projected funding needs of $16.4 million through 2013.

Groundwater

The SCVWD is the groundwater management agency for Santa Clara County. As such, it is responsible for managing groundwater use and recharge in addition to protecting groundwater quality. Groundwater provides about half of the County's potable water supply. Ground water is less expensive than treated water and usually of such high quality that it does not require additional water treatment.

Santa Clara County overlies three sub-basins – Santa Clara Valley, Coyote and Llagas. The Santa Clara Valley Sub-basin is bounded by the Coyote Narrows at Metcalf Road in the south, San Francisco Bay to the north, the Santa Cruz Mountains on the west and the Diablo Range on the east. The operational storage capacity of the subbasin is estimated at 350,000 acre feet.

The Coyote Subbasin extends from Metcalf Road south to Cochrane Road. This subbasin is unconfined and groundwater flows into both the Santa Clara Valley and Llagas Subbasins. The District provides recharge into this subbasin for direct benefit to wells in the area and further benefit to the other two subbasins. Through its groundwater management studies and IWRP process, the District has estimated the operational storage capacity of the Coyote Sub-basin at 25,000 acre feet.

The Llagas Subbasin extends from Cochrane Road south to the County's southern border. It is bounded to the south by the Pajaro River. The operational storage capacity is estimated at 150,000 acre feet. Groundwater in the northern portion of this subbasin has been impacted by perchlorate and nitrate contamination. Some wells require treatment in order to meet water quality objectives.

The groundwater basins are recharged through both natural and artificial means. The District operates and maintains artificial recharge facilities at 18 major recharge pond systems and 30 local creeks. Runoff is captured in the District's reservoirs and released into the recharge facilities for percolation. In addition, raw imported water is used for recharge particularly in the southern portion of the County due to limited surface supply for recharge.

Per the District's Water Utility Enterprise Report (August 2004), the District replenished the Santa Clara Valley Sub-basin with approximately 79,200 AF of locally conserved and imported water. The Coyote and Llagas Sub-basins were replenished with approximately 32,500 AF of locally conserved and imported water.

Land subsidence due to groundwater overpumping has been an issue for Santa Clara County as well as a number of other counties in California that are highly dependent on groundwater sources. The SCVWD

is monitoring groundwater levels and land surface levels in subsidence areas; through proactive management and the appropriate use of water supply sources, the District is working to ensure that land subsidence will not re-initiate

The District is providing leadership in dealing with the perchlorate contamination issue. The Perchlorate Working Group, a partnership between the SCVWD, Morgan Hill, Gilroy and the County is providing a coordinated, focused effort to ensure contaminated groundwater is treated and to minimize the cost to the community. The Working Group has proposed a strategy that includes containing a 10-mile long plume of perchlorate stretching from the southern portion of Morgan Hill to Highway 152, long term restoration of the region's water supply, and a cost recovery plan for the SCVWD and Morgan Hill. These two agencies have spent nearly $5 million to clean up contaminated water supplies. As a result of the Working Group's efforts, the US Congress recently approved $2.25 million in funding to address this contamination issue.

As the groundwater management agency, the SCVWD prepared a Groundwater Management Plan in 2001 which addresses groundwater supply management, groundwater monitoring programs, and groundwater quality management programs. This plan provides the framework for guiding the District's groundwater management operations and is intended to complement the District's Integrated Water Resources Plan (IWRP). As a supplement to the Groundwater Management Plan, Groundwater Conditions Reports are prepared annually to document groundwater conditions. The Groundwater Management Plan includes five recommendations for further analysis and action:

1) Coordination between the Groundwater Management Plan and the IWRP
2) Integration of groundwater management programs and activities
3) Optimization of recharge operations
4) Improved understanding of the groundwater basin
5) Effective coordination and communication with internal and external agencies

The SCVWD is addressing these recommendations through its planning efforts and Capital Improvement Plan.

Imported Water

The SCVWD receives imported water through the State Water Project and the federal Central Valley Project. Water is conveyed to Santa Clara County through two main facilities: the South Bay Aqueduct for State Water Project water, and the San Felipe Project for Central Valley Project water. The raw water is used for surface deliveries to some agricultural users, groundwater recharge or treated at one of the District's three water treatment plants.

The South Bay Aqueduct is owned and operated by the State Department of Water Resources. Water deliveries to Santa Clara County began in 1965. The Aqueduct terminates at the Penitencia Water Treatment Plant in east San Jose. The SCVWD is a State Water Project contractor and has a current Table A allotment of 100,000 acre-feet per year; the percentage of the allotment to be delivered each year

is determined by the DWR based on yearly conditions in the San Joaquin-Sacramento Delta and upstream reservoir storage.

Water from the San Felipe Project is delivered from the San Luis Reservoir through the Pacheco and Santa Clara Conduits. The Central Valley Project is owned and operated by the US Bureau of Reclamation. Water deliveries to Santa Clara County began in 1987. The Pacheco Conduit begins at the San Luis Reservoir and feeds into the Santa Clara Conduit. This pipeline traverses Gilroy, San Martin and Morgan Hill, terminating at the Coyote Pump Station near Coyote Creek west of the Anderson Reservoir. The SCVWD is a San Felipe Division contractor and has a contract for the delivery of 152,500 acre feet per year; annual deliveries are determined by the USBR based on yearly conditions in the Delta and upstream reservoir storage.

Imported water is the most costly source of supply, and potentially the most unreliable because of hydrologic variability and regulatory restrictions. The SCVWD is actively engaged in managing its imported water programs. A number of projects that will improve reliability and capacity are included the District's Capital Improvements Plan, including improvements to the San Luis Reservoir Low Point (partnering with DWR, USBR and other CVP contractors), stabilizing the Santa Clara Tunnel landslide, improvements to the Pacheco pumping plant, and resolving operation problems related to shutdowns on South County and San Benito County transmission lines. The District has also identified the need to acquire right of way along some pipelines to improve operations and reduce emergency response times. $23.1 million in funding has been appropriated through 2005 and the need for an additional $16.2 million in funding has been identified for 2006 through 2013.

The SCVWD considers water banking a viable strategy to increase imported reliability in dry years and reduce future supply costs. Water banking is a program whereby the District is able to store excess State or Central Valley Project water during average and wet years to ensure adequate supply during dry years. The District banks water in groundwater storage outside of the County. A portion of the District's State or Federal water supply water is conveyed to a banking partner, another water district that operates a groundwater conjunctive use program. The District primarily uses the Semitropic Water Storage District in Kern County for State Water, and has banked CVP water at the San Justo Reservoir in San Benito County in the past. The District has appropriated $3.56 million through 2005 for the Semitropic Groundwater Banking Program. An additional $26.8 million will be needed through 2013 to carry out this program to the level planned.

Water Treatment

The District operates three water treatment plants, all in the central and northern portions of Santa Clara County. These are the Rinconada plant in Los Gatos, the Santa Teresa plant in the Almaden Valley, and the Penitencia plant in the foothills of east San Jose. Plant capacity and age is summarized below:

Water Treatment Plant	Primary Water Source	Nominal Treatment Capacity (avail for retail use)	Year Constructed
Penitencia	South Bay Aqueduct	40 MGD	1974
Rinconada	South Bay Aqueduct or San Felipe Project	80 MGD	1967
Santa Teresa	San Felipe Project, Anderson and Calero Reservoirs	100 MGD	1988

The District has appropriated $116 million for water treatment plant upgrades in 2004 and 2005. An additional need for $24.2 million has been identified through 2010.

Water Transmission and Distribution

The SCVWD transmission and distribution system includes 3 pumping stations, 142 miles of pipeline and 8.4 miles of tunnel. Recently completed projects include the Almaden Valley Pipeline Cathodic Protection System, pipeline protection and modifications, and the Milpitas Pipeline relocation.

One significant facility recently completed in the northern county is an intertie between the SCVWD and SFPUC systems that has the capacity to pass 40 million gallons of treated water per day during emergencies or service interruptions, planned or unplanned. The connection is located in Milpitas and improves water reliability in the northern and central portions of the county. The total estimated cost for this facility is $9.8 million, which was shared 50/50 with SFPUC.

The District has allocated $12.2 million for infrastructure improvements in 2004 and 2005, and has identified an additional $23.5 million for 2006 through 2013.

Recycled Water

Recycled water plays a vital role in the long term water supply outlook for Santa Clara County and the SCVWD has factored it into its long range planning. For its long range planning, the District uses the following projections for annual production:

- Recycled Water Target for 2010 20,000 AF
- Recycled Water Target for 2020 44,000 AF

In 1999 the District adopted two Ends policies, or goals, that state that water recycling will account for 5% of total water use in 2010 and 10% in 2020. In support of this goal, the District has completed an Advanced Recycled Water Treatment Feasibility Study to evaluate potential new markets and uses for recycled water if its quality were enhanced. The District has also approved funding to pilot advanced treatment technology of local recycled water. The advanced treatment will improve the overall quality of the tertiary treated wastewater so that it will not impact the quality of the groundwater basin. The District will be the recycled water wholesaler in the future Coyote Valley development, per an existing

agreement. This advanced treatment technology is vital in ensuring that recycled water quality is appropriate for the uses in Coyote Valley.

Recycled water is produced at four wastewater treatment plants located in Palo Alto, Sunnyvale, San Jose and Gilroy. The District has entered into recycling partnerships with San Jose and Sunnyvale and is pursuing greater involvement with recycling programs with the Palo Alto Regional Water Quality Control Plant. To provide incentive for recycled water source development in North County, the SCVWD subsidizes any recycled water project that offsets the demand for SCVWD treated water at $115 per acre foot of recycled water developed.

In the South County the South County Regional Wastewater Authority is the producer and the District owns and operates the recycled water distribution system. To date, the District completed its South County Recycled Water Improvements Project that included total funding of $7.0 million.

Watershed and Stream Stewardship

In addition to its wholesale water operations and groundwater management, the SCVWD is the lead agency in the county charged with providing watershed stewardship programs and services. Watershed stewardship is the management of natural resources in a manner that fosters ecosystem health for the county's more than 700 miles of streams, improved water quality, flood protection and compatible recreational opportunities.

Its funding stream for watershed stewardship is comprised of property taxes, capital reimbursements from state and federal partners, intergovernmental revenues from grants and voter-approved benefit assessments and special property taxes – including the Clean, Safe Creeks and Natural Flood Protection special tax approved by voters in November 2000.

The main components of the SCVWD's watershed stewardship program are as follows:

- **Providing flood protection** including: planning, design and construction of large-scale flood protection capital projects; maintenance of already-constructed flood protection infrastructure; flood-fighting emergency response and sandbag programs; flood safety-focused public outreach; land development review; and permitting for activities in the District's jurisdictional areas.

- **Ensuring clean, safe water in creeks and bays** including: protection of local waterways from pollutants such as mercury and diazinon; keeping neighborhood creeks free from trash and debris; clearing bridges and floodwalls of graffiti; inspecting creeks for illegal dumping; and cleaning creek channels of illegally dumped chemicals.

- **Creating healthy creek and bay ecosystems** including: repairing and strengthening stream banks to improve property protection, creek side vegetation and water quality; protecting threatened and

endangered species; removing invasive plant species from local waterways; and restoring natural habitat, fisheries and native plant species

- **Establishing trails, parks and open space along waterways** including: creating partnerships with cities and the county to provide creek side parks and trails, on-water recreation at reservoirs, preserve natural floodplains as open space resources and provide alternate transportation corridors; administering an annual grant program for the construction of trails or purchase of open space.

Summary

The SCVWD's Integrated Water Resources Plan serves as the District's guiding document for comprehensive management of Santa Clara County's water resources through 2040. The District's water supply is obtained through a combination of groundwater, local surface, recycled, and imported water. The northern and central portions of the County rely on both groundwater (including recharged local and imported surface supplies) and treated surface supplies; the southern portion depends on groundwater (including recharged local and imported surface supplies) for its sole source of potable supply. The District proactively manages the water resources and has planned for system improvements to increase water reliability and efficiency. The District has planned for system needs through its IWRP, Groundwater Management Plan, and Capital Improvement Plan. The recently completed intertie connection between the SCVWD and SFPUC treated water transmission systems is an example of the projects the District is undertaking to help ensure reliability during emergency or temporary service interruptions. The District's Water Conservation Program is essential to improving water supply reliability because the water savings achieved from implementing conservation will reduce current and future water demand. This is critical in that not only will it assist in meeting long-term reliability goals, but will also assist in meeting short-term demands placed on the water supply system during critical dry years.

3. Financing Constraints and Opportunities

The SCVWD uses both governmental and proprietary funds to account for its operations. The proprietary funds include the Water Enterprise, Equipment and Risk Insurance Funds. The governmental funds include the District's General Fund as well as special revenue funds for five geographic watershed areas, the Clean, Safe Creeks & Natural Flood Protection program, and the Watershed and Stream Stewardship Fund. The District has established a reserve policy that includes prescribed levels for Operating Reserves, Capital Reserves and Reserves for Funded and Contingent Liabilities.

The District uses a biennial budgeting process and a ten-year planning timeframe for its Capital Improvement Plan. A summary of the District's amended adopted budget for 2004-2005 follows:

2004-2005 Amended Budget	Combined Funds	Water Utility only
Revenue	$249,357,626	$152,338,728
Operating Outlay	$183,527,865	$124,850,746
Capital Projects	$120,500,384	$70,766,036
Other Funding Sources*	$46,345,097	$40,474,242
Balance Available	($8,325,526)	($2,803,812)
Reserves:		
Operating Reserves	$44,770,605	$19,194,130
Capital Reserves	$62,577,131	$4,533,455
Contingent Liabilities	$42,266,883	$21,873,374
Total Reserves	$149,614,619	$45,600,958

** includes interfund transfers and financing*

The amended budget for 2004-2005 funds operating and capital needs from District revenue sources, planned debt financing and by using $8,325,526 from available reserves. District revenue is derived from a variety of sources:

Revenue Source	% of Total Revenue
Property Tax	24.6%
Special Parcel Tax	10.8%
Benefit Assessments	7.8%
Intergovernmental Services	0.9%
Groundwater Charges	20.1%
Treated Water Charges	26.1%
Surface/Reclaimed Water Sales	0.4%
Interest	3.7%
Capital Reimbursements/Contributions	2.5%
Other	3.1%

The SCVWD finances major capital projects by issuing revenue bonds, commercial paper or Certificates of Participation. The Water Utility Enterprise budget for 2004-2005 includes revenue from the issuance of $40,000,000 in commercial paper to be used for capital projects. Long term debt includes $5,835,000 in Water Enterprise General Obligation bonds at interest rates range from 3.88% to 5.285%. The District also issued Water Utility Revenue Bonds in 2000. The outstanding balance at June 30, 2004 was $56,402,000 comprised of $51,483,000 of tax-exempt bonds with interest rates at 5.198% and $4,919,000 of taxable bonds with interest rates at 7.878%. Overall, the SCVWD has $294 million in long term debt and other non-current liabilities as of June 30, 2004. The District has different credit ratings on its

various types of debt instruments all generally within the same range. The latest ratings are AA+ by Standard and Poor's and Aa2 by Moody's.

The SCVWD has been significantly impacted by the State budget act of 2004 which requires special districts to contribute to the Educational Revenue Augmentation Fund (ERAF) for FY 2004-2005 and 2005-2006 through a reduction in property tax revenue. The District's adopted budget approved in June 2004 factored in an $11.2 million contingency for the expected reduction in property tax revenues with the elimination of operating contingency appropriations for most funds and a reallocation of other reserves to a newly established State Budget Impact-ERAF Reserve. The actual contribution calculated in November 2004 is 10% of total district revenues or $51 million for the two year period. The District is in the process of determining how this revenue shortfall should be addressed, but it will likely result in project delays, operational cutbacks, and increased rates.

The District uses two Water Utility Zones (Zone W-2 and W-5) to account for operations within its Water Utility Enterprise. The North County (Zone W-2) comprises approximately 80% of the District's water consumption. Due to higher costs in North County, this zone accounts for approximately 95% of Water Utility revenue. The following table summarizes the actual FY 2002-2003 finances for each water charge zone of the District's Water Utility Enterprise.

Santa Clara Valley Water District – North County Water Fund FY 2002-2003 Financial Summary ($ thousands)			
Revenue -	Water Sales	$117.66	71.5%
	Capital Carryforward	$40.40	24.5%
	Other Revenue	$6.57	4.0%
	Total	$164.63	100%
Expenses -	Operations	$81.32	40.6%
	Water Purchases *	$25.13	12.6%
	CIP Projects	$91.60	45.8%
	Other	$2.11	1%
	Total	$200.16	100%

Santa Clara Valley Water District – South County Water Fund FY 2002-2003 Financial Summary			
Revenue -	Water Sales	$5.20	90.7%
	Other Revenue	$0.53	9.3%
	Total	$5.73	100%
Expenses -	Operations	$5.84	74.4%
	Water Purchases *	$0.92	11.7%
	CIP Projects (Amortized)	$1.09	13.9%
	Total	$7.85	100%

In the past revenue for the North has funded District operations in the South County, essentially providing a rate subsidy. The District is working directly with retailers in the North County to rectify this situation and provide parity in the rate structure for each area. Rates in the South County were significantly increased in 2004-2005 in order to restore financial stability and ensure that revenue covers costs.

4. Cost Avoidance Opportunities

The District is aggressively seeking cost avoidance opportunities, particularly in light of the magnitude of the impact from the State budget act discussed earlier. The District employed cost containment strategies in its FY 2004-2005 Addendum budget, including evaluating cost escalation factors used in preparation of the initial biennial budget. The District also completed a comprehensive analysis of core services and delivery processes, including streamlining operations, re-prioritizing projects, and deferring non-critical planning activities. This effort resulted in approximately $6.2 million in debt financing reduction.

The District is developing an asset management plan which will allow comprehensive tracking of costs, maintenance, replacement and other system needs. This life cycle maintenance management approach will optimize the repair/replacement of water utility facilities and systems.

The District is also capitalizing on cost avoidance opportunities through the strategic management of its water resources. Local supplies are inherently more cost efficient than imported supplies, and the District has included capital projects in order to develop local supply sources. As described above, the SCVWD is participating in the Semitropic Groundwater Banking program in order to reduce the costs for future imported water supply.

The District is also providing a $115 per acre foot incentive to encourage the development of recycled water supplies in the North County. With targets set at 5% of total supply in 2010 and 10% of total supply in 2020, the District is actively engaged in maximizing recycled supplies to offset potable demand, including the development of a pilot plant for advance treated tertiary water that could have expanded use within the County.

The District's 2004-2005 budget included funding for 903 staff positions. However, with the impacts from the State budget act, the District recently eliminated 90 vacant positions (10% of the permanent work force) in order to reduce personnel costs.

The SCVWD has a comprehensive conservation program in order to reduce demand. The District is also maximizing its groundwater recharge opportunities in order to reduce overall costs.

5. Management Efficiencies

The SCVWD is achieving management efficiencies through its operational methods, budgeting approach and long term planning efforts.

In 1999 the Board of Directors formally adopted a series of Ends policies, or goals for the District. These policies are used in the decision-making process and each program or project must directly support at least one of these policies. In 2003, the District reorganized its Operations into two separate core business areas: Water Utility Enterprise and Watersheds. The Water Utility Enterprise is comprised of the Water Utility Operations and Water Supply Management divisions, the Office of Emergency Services, and the Planning, Finance and Communications Unit. Watershed Operations is structured in three divisions. Each division is responsible for both a geographic area of focus and programs and services that support the operation as a whole such as regulatory compliance, ecological services, vegetation management, community projects review, stream water quality and watershed planning. A business management unit is charged with financial planning, customer relations, and maintaining the Watersheds' ISO 9001:2000 and 14001 certifications.

The District is planning to develop an asset management plan which will allow comprehensive tracking of costs, maintenance, replacement and other system needs. The Water Utility Enterprise also uses cost centers for legal and accounting reporting.

In 2003, the District implemented the SMART Business Program, an organizational improvement initiative. The program focuses on customer service, employee involvement, performance, quality and business results. Accomplishments to date include: completion of the needs assessment for achieving ISO 9001/14001 certification; completion of the District Green Business assessment process; and implementation of the District SMART Ideas program. Future process improvement strategies include identification of the District core services, its customers, and alignment to District policies, planning, budgeting, procedures and performance metrics.

Performance measurements are used for each organizational segment of District operations. Targets for each goal are set, and year to date results are reported quarterly for the current year as well as the final result for the prior year. This feedback highlights performance that meets or exceeds the stated targets as well as issues that may need correction.

6. Shared Facilities

The SCVWD shares facilities with a number of agencies. It shares infrastructure with the SFPUC through the emergency intertie in Milpitas, as well as imported water facilities with the Department of Water Resources and the US Bureau of Reclamation. (The District has a contract to operate some of the infrastructure owned by USBR.) The water banking that the District is engaged in through the Semitropic Groundwater Banking Program is expected to provide long-term benefits for Santa Clara County. The preparation and implementation of the IWRP includes the involvement of other agencies as well.

The District is a signatory to a number of Joint Powers Agreements, including the San Luis and Delta-Mendota Water Authority to provide 3 million acre feet for Municipal/Industrial use, agriculture, and a wildlife refuge; the San Francisquito Creek Joint Powers Authority and the Pajaro River Flood Protection

Authority. The District also holds membership in many associations and coalitions to further its water management interests.

In the South County, the District has partnered with the South County Regional Wastewater Authority and the Cities of Gilroy and Morgan Hill to implement the South County Water Recycling Program. The District is also the recycled water wholesaler in South County. The District is also providing leadership in the Perchlorate Working Group to address perchlorate contamination issues, including mitigation and financial restitution.

The District implements a comprehensive Water Conservation Program county wide in co-operation with its retailers. As a signatory to the California Urban Water Conservation Council's Memorandum of Understanding (adopted by District Board in 1991), the District is committed to implementing a number of Best Management Practices (BMPs) for urban water conservation. The Central Valley Project Improvement Act also requires implementation of various BMPs related to agriculture.

7. Rate Restructuring

Supply Rates

The District has contracts to purchase imported water from the State Department of Water Resources and the US Bureau of Reclamation. As part of the revised schedule for the Central Valley Project this last year, the contract renewal with USBR will increase the cost of CVP water by $6.2 million in FY 2004-05 and $9.4 million in FY 2005-06. This increase is due to the USBR's transition from lower "contract" rates to higher "cost of services" rates for imported water delivered through the CVP.

In response to the cost increase, the District has made plans to reduce internal costs. Such plans include reducing operational costs, delaying major capital projects and maximizing the use of commercial paper debt financing.

Demand Rates

The wholesale water rate structure is different for the North and South County delivery areas. The difference is primarily due to the type of water delivered, treatment processes and infrastructure required. South County rates are lower, primarily due to the fact that that area gets more of its water as a percentage from more cost-effective local supplies than North County does.

Over the past two years, the District has significantly expanded its operational activities in the South County in the areas of recycling, water conservation, asset management, security and groundwater quality management. To avoid "rate shock" in those years, the Board chose to increase rates less than would be required to bring revenue and costs into balance. Since then, increases in the CVP rate schedule for imported water and the initiation of an interest charge on outstanding debt to the South County has resulted in the recommendation for an accelerated increase in South County rates.

The District sets wholesale rates at a level sufficient to meet the costs of water supply commitments and water quality standards, while remaining sensitive to the economic conditions affecting its retailers. The District used cost containment efforts, re-prioritization of capital projects, and re-evaluation of debt financing alternatives to hold 2004-2005 rate increases to 8% for the North County and 25% for the South County. There are additional cost pressures in the South County related to recycled water operations and meter maintenance. Therefore, the rate increase in the south was higher than anticipated. The following is a table of historical water rates for the North and South County.

Summary of Water Charges and Percentage Increases ($ per Acre-Foot)

	2001-02	2002-03	Inc	2003-04	Inc	2004-05	Inc
North County Treated Water - Contract	$410	$420	2%	$460	10%	$495	8%
North County Groundwater							
Municipal/Industrial	$330	$340	3%	$375	10%	$405	8%
Agricultural	$33	$34	3%	$37.50	10%	$40.50	8%
South County Groundwater							
Municipal/Industrial	$130	$140	8%	$160	14%	$200	25%
Agricultural	$13	$14	8%	$16	14%	$20	25%

** Source: Table 1-1, WUER, August 2004t*

A number of factors have affected rates recently, including the following:

- The US Bureau of Reclamation has moved from contract rates to higher cost of services rates for CVP water.
- Cumulative costs in the South County through FY 2003-2004 exceed cumulative revenues. This imbalance is projected to continue for the next four years.
- There is a significant uncertainty regarding future revenues and costs caused by the State budget crisis and perchlorate contamination in the South County. The District is aggressively pursuing full cost recovery from Olin Corporation, or other responsible parties in relation to the perchlorate contamination in the South County, but no responsible parties have yet agreed to reimbursement.

Each spring, the District holds a public hearing on multiple dates to receive comments from citizens and interest groups on the water rates proposed for the next fiscal year.

8. Government Structure Options

The SCVWD is an independent special district created by an act of the State legislature. Per Section 2 of the Act, the District shall consist of all the territory of the County of Santa Clara lying within the exterior boundaries of the County. Furthermore, the District is authorized to store water in surface or underground reservoirs within or outside of the District for the common benefit of the district or of any zone or zones affected; to conserve reclaim, recycle, distribute, store, and manage water for present and future use within the District; to appropriate and acquire water and water rights, and import water into the district and to conserve within or outside the district, water for any purpose useful to the district (Section 5.5).

The District provides integrated services related to water management, including water wholesaling, flood control, groundwater management, and watershed stewardship. No other agencies were identified that could provide these services on a county-wide basis. No other government structure options were noted.

9. Local Accountability and Governance

The SCVWD is governed by a seven-member Board of Directors; five directors are elected by geographic areas which coincide with the County's supervisorial districts and two at-large directors are appointed by the County Board of Supervisors. The Directors serve staggered four-year terms. In the March 2004 election, three incumbents ran uncontested. The current board of the Santa Clara Valley Water District is as follows:

Board Member	Title	Term of Office	Compensation*
Rosemary Kamei	Director – District 1	01/07	See below
Joe Judge	Director – District 2	01/09	See below
Richard Santos	Chair – District 3	01/09	See below
Larry Wilson	Director – District 4	01/07	See below
Gregory Zlotnick	Chair – District 5	01/09	See below
Tony Estremera	Director – At Large / North	01/06	See below
Sig Sanchez	Director – At Large / South	01/09	See below

**Compensation:* Directors receive meeting fees of $214.41 per meeting up to ten meetings per month in accordance with District Ordinance 04.02 pursuant to Chapter 2, Division 10 of the California Water Code. Directors receive actual and necessary expense reimbursement in accordance with Board Governance Process Policy GP-10 Cost of Governance. In addition, Directors receive $2,500 per Director per year for annual and necessary expenses in accordance with District Ordinance 73-4, Resolution No. 02-44.

The Board meets the on first and third Tuesday of each month at 9:30 AM and on fifth Tuesdays if necessary. The District provides public notice of meetings to those requesting notification. The meetings are also noticed in front of the District's HQ building in accordance with the Brown Act. The full meeting agenda along with backup documentation are available on line on the District's website (www.valleywater.org).

The District provides a substantial amount of public information on its website regarding the services provided by the District, including water conservation and groundwater protection. The District's financial reports are available as well.

To provide a framework and direction for District activities, the Board of Directors has formally adopted board governance policies which address the governance process; the Board's linkage to the public, Chief Executive Officer and the District's General Counsel; and the goals of the District.

As an additional measure of local accountability, the District has established board advisory committees that assist in developing policies to guide District operations. The committees are as follows:

- Water Commission: assists the Board in formulating policy regarding the municipal and industrial water program
- Agricultural Water Advisory Committee: assists the Board in developing policy regarding water supply for agricultural uses
- Environmental Advisory Committee: advises the Board on issues of environmental restoration and enhancement
- Landscape Advisory Committee: advises the Board on issues regarding water use efficiency in landscaping
- Five Flood Zone and Watershed Advisory Committees: make recommendations relative to the District's priorities and financing policies for flood protection improvements within the following zones – Lower Peninsula, West Valley, Guadalupe, Coyote and Uvas/Llagas

The Water Commission has 32 members representing each of the municipalities as well as the County Board of Supervisors. Meetings are held quarterly in January, April, July and October. Meeting agendas and minutes are posted on the District's website.

The District has an Independent Monitoring Committee for the Clean, Safe Creeks & Natural Flood Protection special tax approved by the voters in November 2000. The committee is comprised of citizen volunteers and an independent oversight report is prepared by the committee annually.

The SCVWD Water Retailers Group provides a means for communication, coordination and input on District programs. As part of this review process, several retailers expressed concern that the District's accountability to the water agencies was somewhat less than expected given the scope and scale of the District's operations and its critical role in Santa Clara County. Specific examples included increases in personnel costs such as staffing levels, salaries and pensions to a degree that significantly exceeded that of other public agencies at the time. In addition, there was a perception that the District was aggressively approving new capital projects without a rigorous cost-benefit analysis. The primary concern was the resulting effect on the District's water rates. These changes were implemented during a period when the District was imposing rate increases and there was no specific mechanism for retailer oversight. Many of the retailers are participating in a finance subcommittee of the Water Retailers group in order to provide input to the District, and the District has sought retailer input on priorities with respect to District programs and projects in relation to potential rate increases. It was suggested that a process for retailer oversight of the District, perhaps based on the model used by the Clean, Safe Creeks & Natural Flood Protection program, would provide the level of information needed by the retail agencies to understand District decisions and ensure that there are no misperceptions regarding District accountability.

– DETERMINATIONS –

1) Population and Growth

The Santa Clara Valley Water District's service area encompasses the entire area of Santa Clara County. Population within the County is expected to reach 2,267,100 by 2030, with an average annual growth rate of 1.2%.

Projected growth rates vary by region; the highest rate of growth is projected in the North County for the cities of Milpitas, San Jose and Santa Clara. The District has factored the County's growth patterns into their long range plans.

2) Infrastructure Needs and Deficiencies

The Santa Clara Valley Water District receives water supply from a combination of sources including imported, ground, and local surface water. Imported water from the State Water Project is delivered through the South Bay Aqueduct and Federal Central Valley Project water is delivered through the San Felipe Project.

Per its enabling act, the District is responsible for the comprehensive management of the water resources within Santa Clara County. To fulfill this requirement, the District has taken a prominent role in providing watershed stewardship programs and services for over 700 miles of streams within Santa Clara County.

The District completed an Integrated Water Resources Planning process in FY 2003-2004 and is implementing the strategies for developing water supplies, including water banking, water conservation, and groundwater recharge. Per the District's 2001 Urban Water Management Plan, water supply in year 2020 will be adequate to meet demand provided the water resources are developed as planned.

The District is the designated groundwater management agency for Santa Clara County. A Groundwater Management Plan was prepared in 2001 to guide planning and operations for groundwater recharge and water quality protection.

The District is providing leadership in the Perchlorate Working Group to address the groundwater contamination issue in South County.

The District has a comprehensive Capital Improvement Plan that uses a 10-year planning horizon for water system infrastructure.

3) Financing Constraints and Opportunities

The SCVWD accounts for its operations with the use of governmental and proprietary funds. The water utility is operated as an enterprise activity.

The District uses long term debt, such as revenue bonds, certificates of participation, and commercial paper to finance major projects. At June 30, 2004, the District had $294 million in long term debt.

The District's expected contribution to the Educational Revenue Augmentation Fund is approximately $51 million for FY 2004-2005 and 2005-2006. The District has eliminated the requirement for operating reserves as a result and is in the process of evaluating other options in order to maintain essential service levels to the greatest extent possible.

4) Cost Avoidance Opportunities

The SCVWD is avoiding costs where feasible in order to maintain essential services and project implementation schedules to the greatest extent possible. This includes eliminating 90 vacant positions, 10% of the permanent work force.

The District has been able to reduce debt financing costs by $6.2 million through re-prioritizing and delaying some capital projects.

Reducing demand for potable water is an effective means to avoid future costs. The District has a comprehensive water conservation program and actively supports the use of recycled water. The District provides an incentive of $115 per acre foot to North County agencies for the development of recycled water supplies in order to offset potable demand.

5) Management Efficiencies

The SCVWD is achieving management efficiencies through its organization, operational programs and planning documents. The District has reorganized operations into two core service areas: Water Utility Enterprise and Watersheds. Its Watershed Operations and Capital Programs Division are ISO 9001:2000 certified. Watershed Operations is also ISO 14001 certified.

The District uses performance measurements to evaluate the achievements and performance of each organizational component. Annual targets are set and progress is tracked quarterly.

6) Shared Facilities

The SCVWD shares facilities with a number of agencies related to water supply, water management, and water use efficiency, including the District's water retailers and the US Bureau of Reclamation.

The District recently completed a 40 million gallon treated water intertie with the SFPUC system that improves reliability in the North County.

The District has a contract to operate some US Bureau of Reclamation Facilities related to the San Felipe project.

The District is providing leadership in the Perchlorate Working Group in order to seek mitigation and restitution for groundwater contamination in South County.

The District has partnered with the South County Regional Wastewater Authority and the Cities of Gilroy and Morgan Hill to expand water recycling in South County. The District is the recycled water wholesaler in South County and owns and maintains recycled water infrastructure that provides system reliability for recycled water deliveries.

The District provides a comprehensive water conservation program county-wide in cooperation with its retailers.

7) Rate Restructuring

The District annually reviews its rate structure based on expected costs. Input is obtained from the water retailers group regarding project priorities. Each spring, the District holds a public hearing on multiple dates to receive comments from citizens and interest groups on the water rates proposed for the next fiscal year.

The District increased rates 8% in North County and 25% in South County for 2004-2005.

8) Government Structure Options

The SCVWD was established by an act of the state legislature and is authorized to provide comprehensive water management services, including water wholesaling, groundwater management and flood control, throughout the County. No other government structure options were noted.

9) Local Accountability and Governance

The SCVWD is governed by a seven-member Board of Directors. The District maintains a website which contains comprehensive information regarding District operations, water supply in the County, and watershed programs. The District provides public notice of meetings and posts agendas and minutes online.

The District's Clean, Safe Creeks & Natural Flood Protection special tax approved by voters in November 2000 includes provisions for an independent oversight committee comprised of community volunteers. An annual report is prepared by the committee which includes an evaluation of performance, actions, costs and project status for those programs funded by the special tax.

B. ALDERCROFT HEIGHTS COUNTY WATER DISTRICT

Overview

The Aldercroft Heights County Water District is an independent special district established in 1958 under the County Water District Law (California Water Code §30000 et seq.). The District serves 119 residences within a 2.5 square mile service area on the western edge of Santa Clara County in the vicinity of the Lexington Reservoir. The District relies on local surface water for its supply. It pumps water directly from Los Gatos Creek under an agreement with the San Jose Water Company (SJWC) which holds the water rights.

1. Growth and Population

The Aldercroft Heights County Water District serves a population of approximately 190 residents. The District's service area is entirely residential, located in a rural, unincorporated area within the Santa Cruz Mountains. This area is within the Los Gatos Watershed Area as described in the County's General Plan. The topography is almost entirely hillsides and the steepness naturally limits the number of parcels that are developable. The District currently provides service to 119 residential connections.

The population within the District's service area is stable and little or no growth is projected. The District estimated that there may only be three developable parcels remaining within the District's boundary and they may only add five new connections over the next twenty years.

2. Infrastructure Needs and Deficiencies

The Aldercroft Heights County Water District's water system includes the following facilities:

Facility	Quantity
Pipelines	3.6 miles
Reservoirs (Tanks)	4
Total Water Storage Volume	0.37 MG
Pump Stations	2
Wells	0
Total Well Pumping Capacity	N/A
Pressure Zones	3

The District has one filter plant which was built in 1992 to treat surface water pumped from the creek. The system is primarily gravity fed. Pump stations are located on Los Gatos Creek and Aldercroft Heights Road to pump treated water into the storage tanks.

The District does not have a Water Master Plan or Capital Improvements Plan; however they are implementing the recommendations of a licensed engineer to improve the reliability of the system during fire conditions. The District spent $71,380 on capital improvements over the past three fiscal years, including projects to improve system pressure for fire flow. They are also in the process of replacing the main storage tank; this should be completed in the fall of 2005.

Water Demand

Water demand within the District is highly seasonal and can range from 16,000 gallons-per-day during wet periods to 30,000 gallons-per-day in the summer. The following table lists existing and build-out water demands during summer:

Demand	Quantity
Existing Average Annual Demand	28-30,000 gallons-per-day
Existing Maximum Day Demand	30,000 gallons-per-day
Existing Peak Hour Demand	12-15 gallons-per-minute
Build-Out Average Annual Demand (2020)	28-30,000 gallons-per-day
Build-Out Maximum Day Demand	30,000 gallons-per-day

The District's service area is entirely residential, although some property owners have micro-vineyards and other large landscape areas on their properties. The system's peak demand capacity is 48,000 gallons-per-day, or 160% of peak demand. The District does not have a water conservation program.

Water Supply

The District's source of supply is local surface water pumped directly from Los Gatos Creek under an agreement with the San Jose Water Company which holds pre-1914 water rights to the creek. The District does not have a contract with the SJWC, but purchases what is needed to meet demand. (The District's demand does not exceed available supply, even in the warmer months.)

Water supply purchases were consistent over the past three years.

Supply	Current Volume	Maximum Available (Contractual)	Percent of Total
San Jose Water Company	6,956 CCF	NA	100%
Total	6,956 CCF	NA	100%

The District has no wells. Emergency backup supply is provided by above-ground water storage tanks. Recycled water is not available within the District's service area.

Water Storage

The District has four storage facilities with a combined capacity of 370,000 gallons. They are in the process of replacing the primary reservoir in the system, a 100,000 gallon steel tank. This tank is located at a higher elevation and fills the other two reservoirs by gravity flow.

The District's current storage capacity is equal to 12.3 days of maximum day demand, which is considered more than adequate.

Summary

Aldercroft Heights relies on local surface water pumped from Los Gatos Creek for its domestic water supply. Storage capacity is adequate to meet 12.3 days of maximum day demand. Based on the recommendations of an engineer, the District has undertaken capital improvement projects for its system within the past few years. These include improving system reliability and pressure during fire conditions. The District is in the process of replacing its main storage facility. The District lacks a master plan or capital improvements program; however given the size of the District, the level of effort required to develop the plans might not be cost-effective. Overall, the Aldercroft Heights system is reliable; it is vulnerable to impacts from earthquakes or hillside movement but the District regularly monitors and maintains its distribution lines to ensure minimal water loss.

3. Financing Constraints and Opportunities

The Aldercroft Heights County Water District's primary source of revenue is water sales; it does receive a small increment of property taxes from its portion of the 1% property tax as well as some interest income. The following table summarizes the District's financial performance in FY 2002-2003.

Aldercroft Heights County Water District – FY 2002-2003 Financial Summary			
Revenue -	Water Sales	NP	
	Interest Income	NP	
	Other Revenue (Property Taxes)	NP	
	Total	$165,326	100%
Expenses -	Water Purchases *	NP	
	Transmission/Distribution	NP	
	Customer Accounts	NP	
	Admin/Management/General	NP	
	Total	$116,457	100%
Reserves		$108,000	65% of revenue

NP – not provided

The District was formed prior to the passage of Proposition 13. When it was created it received a dedicated share of property tax revenues from the properties within its boundaries. Subsequent to the passage of Proposition 13, the District now receives a dedicated share of the 1% property tax. This revenue source is factored into the budget each year. In FY 2001-2002, property taxes comprised 3% of total District revenue.

The State's budget act of 2004 significantly changed how local revenues are allocated. Special districts within California are required to contribute an aggregate of $350 million in both FY 2004-2005 and 2005-2006 to their respective county's Educational Revenue Augmentation Fund. The County Auditor-Controller will reduce the District's annual tax increment by the required contribution amount. For Aldercroft Heights, this amount is estimated to be $4,672 for FY 2004-2005. This is not a significant loss

in revenue, and the District appears to have sufficient reserves to cover it. Proposition 1a, approved by voters in November 2004, establishes protections so that special districts will not be subject to revenue shifts in the future.

Aldercroft Heights reported revenues exceeding expenditures for each of the three years reported on the questionnaire. The District had $91,000 in its Capital Reserve Fund and $17,000 in other reserves at the end of FY 2002-2003. The capital reserves will be used to partially finance the new storage facility mentioned above. The District does not currently have any long-term debt, but they may need to finance a portion of the tank replacement project. An audit was completed in July 2003 and the results were not qualified.

4. Cost Avoidance Opportunities

The District is avoiding personnel costs by operating with independent contractors rather than paid staff. The District is in the process of replacing its main storage tank, avoiding the costs of costly repairs or improvements in the future. The system is regularly monitored and any maintenance issues are addressed in a timely manner to avoid more extensive repairs in the future.

5. Management Efficiencies

The Aldercroft Heights County Water District is currently managed by independent contractors serving as the business manager and water manager. The water manager is experienced in operating public water systems. This provides greater efficiencies to the District as it does not require full-time management with the limited number of connections.

6. Shared Facilities

The Aldercroft Heights County Water District is geographically isolated from other water agencies and opportunities to share facilities are limited.

7. Rate Restructuring

Supply Rates

The Aldercroft Heights County Water District purchases water under the rate structure for untreated water. The San Jose Water Company is regulated by the California Public Utilities Commission (CPUC) and any rate changes must be approved by the CPUC. Aldercroft Heights is currently paying a rate of $1.11820 per CCF plus a $46 monthly meter charge. This rate was recently adjusted as the District had been paying treated water rates in the past.

Demand Rates

Aldercroft Heights charges a base rate of $83 for the first 4 CCF. Seniors and the disabled are charged a discounted rate of $63. Rates were increased $10 in 2002 for both types of accounts. Additional water is charged at $11 per CCF or $8.25 for seniors and the disabled. The District does not charge a meter charge.

For comparison to other water agencies, a typical demand of 20 CCF has been used throughout this report. Using 20 CCF and a ¾" meter, the monthly bill for a customer of Aldercroft Heights would be $259. It should be noted that this is a much higher demand level than typical for District customers.

The District is not anticipating another rate increase in the foreseeable future.

8. Government Structure Options

The Aldercroft Heights County Water District is currently serving the area within its boundaries. The District's boundary and Sphere of Influence are coterminous. No other public agencies were identified that could provide water service to the area, and no other government structure options were identified.

9. Local Accountability and Governance

The District is governed by a five member Board of Directors; two of the directors were elected unopposed and three were appointed by the County Board of Supervisors. The board members serve four- or two-year terms. The current board of the Aldercroft Heights County Water District is as follows:

Board Member	Title	Term of Office	Compensation
Deirdre Cernuska	Board Chair	2007	none
Melissa Zender	Board Member	2007	none
Victoria Pearce	Board Member	2007	none
Kim Huebner	Board Member	2005	none
Tracy Avent	Board Member	2005	none

The Board meets the first Thursday of each month at 6:30 PM. Meeting agendas are posted in two places within the District at least 72 hours prior to a meeting. New board members are not provided with an orientation, and the District does not conduct regular reviews of the Brown Act or the Fair Political Practices Commission. It does review public disclosure requirements.

The District's latest Water Quality Report was prepared in April, 2003. There were no violations to report.

– DETERMINATIONS –

1) Population and Growth

The Aldercroft Heights County Water District currently serves a population of 190. The population within the service area is stable and little or no growth is expected.

2) Infrastructure Needs and Deficiencies

The Aldercroft Heights County Water District relies entirely on local surface water pumped from Los Gatos Creek under an agreement with the San Jose Water Company. The SJWC holds pre-1914 water rights to the creek.

The District maintains water storage reservoirs with capacity for 12.3 days at maximum day demand. The storage tanks also compensate for daily peaking and emergencies.

The District has undertaken some capital improvement projects in the past few years to improve system pressure and reliability for fire fighting as well as storage tank replacement.

3) Financing Constraints and Opportunities

The Aldercroft Heights County Water District's revenues are sufficient to cover operating costs and provide for an adequate level of reserves.

The District uses a "pay as you go" approach, financing the majority of infrastructure projects out of reserves. The District currently has no long-term debt.

4) Cost Avoidance Opportunities

The District is avoiding costs through the use of independent contractors to manage the District's operations and system.

The District does not have a water conservation program.

5) Management Efficiencies

The Aldercroft Heights County Water District is managed by a business manager and a water manager, (both independent contractors), under the direction and oversight of the District's Board of Directors.

6) Shared Facilities

The Aldercroft Heights County Water District is geographically isolated and there are limited opportunities to share facilities.

7) Rate Restructuring

The District uses a two-tiered rate structure. Water rates were last increased in 2002.

8) Government Structure Options

The District is providing water service in an unincorporated area in the Santa Cruz Mountains. No other public agency was identified which could provide water service to the area. No other government structure options were noted.

9) Local Accountability and Governance

The Aldercroft Heights County Water District has a process for ensuring local accountability and governance. Directors are elected or appointed by the County Board of Supervisors. The Board meets regularly and agendas are posted in two locations.

C. PURISSIMA HILLS COUNTY WATER DISTRICT

Overview

The Purissima Hills County Water District is an independent special district established in 1955 under the County Water District Law (California Water Code §30000 et seq.) to provide water service in the northern portion of Santa Clara County. Its service area is comprised of approximately two-thirds of the Town of Los Altos Hills and unincorporated area to the south. The California Water Service Company (Cal Water) serves the remaining eastern and southeastern portions of the Town. The District provides water to approximately 6,600 residents within a service area of 13.4 square miles. Its only source of supply is treated surface water delivered through the SFPUC's Hetch Hetchy Water System.

1. Growth and Population

The Purissima Hills County Water District estimated that it serves a population of approximately 6,600 residents. The District's service area is predominantly residential, characterized by estate homes on minimum one-acre lots. The General Plan for the Town of Los Altos Hills includes two residential intensities: very low to low, and low to medium. For the entire town (including the Town's sphere of influence), the resident population at build-out is projected to be 14,100. Water demand is higher than typically found in districts of a similar size, primarily due to the size of the homes and landscaped area. According to a draft Water Supply Master Plan currently under development, the District is projecting a population of 6,731 in 2033 and an increase in water demand at a rate of 2% per year over the next 10 years. ABAG's estimated population within the District was 6,032 for 2000, with a projected annual growth rate of 0.37%. Most of the growth will likely occur due to large parcel splits and new construction as a result of increasing property values.

The District currently provides service to the following connection types:

Connection Type	Count	Percent of Total
Residential	2,033	95%
Non-Residential/Industrial	96	5%
Total	2,129	100%

Changes in growth and population, and the related increase in water demands, are expected to be primarily residential.

2. Infrastructure Needs and Deficiencies

The Purissima Hills County Water District's water system is comprised of the following components:

Facility	Quantity
Pipelines	101 miles
Reservoirs (Tanks)	11
Total Water Storage Volume	10 MGD
Pump Stations	4
Wells	0
Total Well Pumping Capacity	N/A
Pressure Zones	4

The District expanded its service area by taking over 5 to 6 smaller mutual water companies within Los Altos Hills back in the 1970's. Some of its current infrastructure was originally owned by the mutuals and was incorporated into the system at the time of acquisition.

There is an existing intertie between Purissima Hills and the California Water Service Company (Cal Water) that has the capacity to transfer approximately 1,000 gallons per minute. The water primarily flows to CalWater. However, the connection could benefit Purissima Hills in the case of an extreme water shortage if water pressures were significantly reduced by closing certain valves to isolate the normal hydraulic gradeline. The District has a temporary intertie with the City of Palo Alto and two turnouts from SFPUC. Even with these interties, the District's ability to provide service would be limited if service from SFPUC were interrupted for any lengthy period of time. This is a potential infrastructure deficiency. The District is in the process of developing permanent interties with the City of Palo Alto and Cal Water.

The District's infrastructure is reaching its design life expectancy and the District has been following a gradual program of evaluation and replacement of aging pipelines. The District has identified several capital improvement projects to be completed over the next five years. Included are pipeline evaluations and replacements, upgrades within Zone 2½, an intertie with CalWater, a new District Office, a Zone 3 intertie, replacement of the Altamont Tank, and a new high pressure pump at Deer Creek. Specifics to the needs assessment that was used to determine the CIP were unavailable, but the overall list of projects addresses improvements to pipeline reliability, water storage, and redundancy with the addition of two interties.

The District participated in a joint effort with the Los Altos County Fire District to upgrade fire hydrants within the water service area. The upgrades were needed to improve system reliability, fire flows and circulation. The Fire District's budget for FY 2003-2004 included $330,000 for this project.

Water Demands

The following table lists existing and build-out water demands:

Demand	Quantity
Existing Average Annual Demand (2003)	2.19 MGD
Existing Maximum Day Demand (2003/4)	4.0 MGD
Existing Peak Hour Demand	NP
Build-Out Average Annual Demand (2020)	NP
Build-Out Maximum Day Demand	NP

NP – not provided

In FY 2002-2003, residential customers accounted for 95% of the service connections and 90% of the total water demand. Based on a maximum day demand of 4 MGD, the average demand per connection would be 1,878 gallons. Generally, the typical average day demand for residential customers is around 500 gallons per day. Therefore, even considering the maximum day, water demand in this District is significantly higher than typical primarily due to the size of the homes and landscape irrigation requirements.

Water Supply

The District relies solely on imported water from SFPUC. All water is pre-treated by SFPUC as there are no water treatment facilities within the District. Four pump stations are used to move water to higher zones within the service area.

The District is currently exceeding its contractual allotment with SFPUC, although this has not been an issue since other agencies have not taken their full contractual amount and the supply is available. BAWSCA will be negotiating a new contract with SFPUC on behalf of all of the SFPUC wholesalers which will take effect in 2009. It is expected that the District's proportional share will be increased to a level sufficient for future demand. The following table lists current and contractual water supply:

Supply	Current Volume	Maximum Available (Contractual)	Percent of Total
San Francisco Public Utilities Commission	2.19 MGD	1.62 MGD	100%
Total	2.19 MGD	1.62 MGD	100%

Groundwater is not used by the District, and the District has no existing wells. The District has performed extensive research to develop a well both inside and adjacent to the District and ultimately drilled two test holes based on the best potential of this research. Results of these test holes have indicated poor water quality and quantity. The District is no longer pursuing a well as a supply alternative. Emergency backup supply is provided by above-ground water storage tanks.

Recycled water is not available within the District's service area. It is generally used for commercial and institutional landscapes and industrial processes. The cost would be prohibitive to provide recycled water to the small number of potential customers within the District's service area.

Water Storage

The District has recognized the need for additional storage facilities and capacity. Altamont Tank #1 is in very good condition. It has been seismically upgraded, does not leak and requires very little maintenance. The Altamont Tank site is logistically central but the 450,000 gallon storage is undersized relative to the population demand. Building an optimally sized tank to meet the demand requirements is problematic due to site restrictions. All of the tanks acquired with the mutuals were demolished due to condition and hydraulic gradeline.

3. Financing Constraints and Opportunities

The Purissima Hills County Water District's primary source of revenue is water sales and user fees. The following table summarizes the District's financial performance in FY 2003-2004.

Purissima Hills County Water District – FY 2003-2004 Financial Summary			
Revenue -	Water Sales	$3,251,606	86%
	Inspection/Install Fees	$37,417	1%
	Other Revenue (Property Taxes)	$505,655	13%
	Total	$3,794,678	100%
Expenses -	Water Purchases *	$1,276,848	45%
	Pumping Power/Treatment	$311,401	11%
	Maintenance	$632,527	22%
	Admin/Management/General	$614,751	22%
	Total	$2,826,527	100%
Reserves		$2,197,9010	58% of Revenue

** Purchases from SFPUC*

The District was formed prior to the passage of Proposition 13. When it was created it received a dedicated share of property tax revenues from the properties within its boundaries. Subsequent to the passage of Proposition 13, the District now receives a dedicated share of the 1% property tax. This revenue source is factored into the budget each year. In FY 2001-2002, property taxes comprised 12% of total District revenue.

The State's budget act of 2004 significantly changed how local revenues are allocated. Special districts within California are required to contribute an aggregate of $350 million in both FY 2004-2005 and 2005-2006 to their respective county's Educational Revenue Augmentation Fund. The County Auditor-Controller will reduce the District's annual tax increment by the required contribution amount. For

Purissima Hills, this amount is estimated to be $312,981 for FY 2004-2005. This is a significant loss in revenue; however, the District has sufficient revenues to cover this impact. Proposition 1a, approved by voters in November 2004, establishes protections so that special districts will not be subject to such significant revenue shifts in the future.

4. Cost Avoidance Opportunities

The District is actively utilizing cost avoidance and cost savings opportunities for various aspects of the water delivery process. The District is using an updated system-wide hydraulic model to identify alternatives in order to solve problems in low pressure areas and optimize the water delivery system. It has recently upgraded its Supervisory Control and Data Acquisition (SCADA) system to allow monitoring of critical facility data including tank water elevations and pump stations. The District is also in the process of creating a Geographic Information System (GIS) database of existing facilities. The combination of GIS, hydraulic model and SCADA provides the District with the tools to effectively manage operations and information storage. Through planning and management, the District is able to act on cost avoidance opportunities when identified.

5. Management Efficiencies

The Purissima Hills County Water District operates with the following staff:

Staff Type	Number FTE's
Management/Administrative	1
Operational	5
Professional/Support	2
Total	8

In the past 12 months, the District has received 21 complaints, primarily due to high turbidity (cloudy water) and water leaks.

As mentioned above, the District is achieving management efficiencies through its master planning process and the use of technology.

6. Shared Facilities

The Purissima Hills County Water District shares facilities with other agencies as appropriate. It has a temporary intertie with Palo Alto and is investigating permanent interties with Palo Alto and Cal Water. As noted earlier, the District participated in a joint effort with the Los Altos County Fire District to upgrade fire hydrants in the service area.

Purissima Hills is a member of BAWSCA, utilizing the structure and functions of that agency to represent the District's interests with the SFPUC.

7. Rate Restructuring

Supply Rates

The District is subject to rate changes instituted by SFPUC. SFPUC increased wholesale rates 25% in 2003 and is expected to increase rates by another 47% by 2006. The District's current cost for treated water is $492.23 per acre foot. The District's ongoing participation in BAWSCA is critical to the management of these cost increases and the contract with SFPUC.

Rates are expected to continue to increase significantly over time, and cost increases will be reflected in the rates charged to the District's customers. However, due to the economic profile of the District's service area, increasing water rates are not considered a significant issue.

Demand Rates

The District's current rate structure has five tiers. The District's average monthly usage varies widely between summer and winter. The average in summer months is 62 CCF and only 15 CCF in winter. Based on the overall average residential monthly demand for peak demand of 4 MGD, or approximately 1,800 gallons per day (73 CCF), the monthly bill would calculate as follows:

10 CCF @ $1.95 =	$19.50
20 CCF @ $ 2.15=	$49.00
30 CCF @ $ 2.95=	$88.50
13 CCF @ $3.55 =	$46.15
¾" meter =	$13.50
Total Charge	$216.65

For comparison to other water agencies, a typical demand of 20 CCF has been used throughout this report. Using 20 CCF and a ¾" meter, the monthly bill would be $57.50.

The District conducted a formal rate study in 2004 to analyze the current rate structure in relation to expected cost increases. The study recommends increasing the overall monthly rates between 3% and 12% over the existing five tiers. For the highest water users, a sixth tier was recommended increasing the billed unit rate by 20% for customers using over 200 CCF per month. The increased rates are expected to compensate for the increasing wholesale water rates and projected cost of CIP projects required in the future. They are also intended to encourage water conservation for the highest water users within the District.

8. Government Structure Options

The Purissima Hills County Water District's Sphere of Influence and Boundary are coterminous. However, there are two parcels currently being service outside the District boundary. These are specifically identified in the LAFCo staff report regarding the map for the District (December 7, 2004). LAFCo discourages special districts from providing services outside of their boundaries. LAFCo may

consider the option to annex these properties into the District to ensure that the service area boundaries are coterminous with the District's adopted boundaries.

Government structure options are limited for the Purissima Hills County Water District. There is strong community support for having a small, locally controlled water District provide service to the area. In the mid 1990's, Cal Water expressed interest in acquiring the District. This change was not supported by the residents and no further discussions have been held regarding the issue.

The District relies solely on imported water provided by SFPUC for its supply. In general, most public water systems are expected to have two sources of supply. Currently the District has only one permanent emergency intertie with Cal Water and one temporary intertie with Palo Alto that could assist the District in the event of an extreme water shortage. Although the District has adequate storage, there is a concern regarding the reliability of SFPUC supply in the event of a natural or manmade disaster. If the SFPUC supply were interrupted for any extended period of time, the District's ability to provide service would be limited. Alternative water supply sources would be costly to implement.

The District serves both incorporated area within the Town of Los Altos Hills and unincorporated area in the County. No other public agency was identified that could provide service to the entire service area. Two government structure options were identified:

1. Maintain the status quo

This option would allow the District to continue its operations with no changes to its boundaries. The current areas served outside District boundaries could be covered by out-of-agency agreements. The District is providing adequate services, has the support of the community and no significant problems have been identified. The disadvantage is that it does not address the service being provided outside the District's boundary.

2. Annex the two parcels currently receiving service to the District

This option would expand the District's boundary to include the two parcels currently receiving service outside the District. The advantage to this option is that it would clean up the District boundary. No disadvantages were noted as the parcels are already receiving service and the District has the infrastructure water supply to serve them.

9. Local Accountability and Governance

The District prepared and published their annual 2003 Water Quality Report in June 2004. No violations were noted.

The Purissima Hills County Water District is governed by a five-member Board of Directors; Directors are elected at large to serve staggered, four-year terms. In the November 2004 election, there were eight candidates for three positions; two were incumbents. The current board of the Purissima Hills County Water District is as follows:

Board Member	Title	Term of Office	Compensation
Ernest Solomon	Director	12/08	NP
Daniel Seidel	Director	12/08	NP
Bruno Ferrari	Director	12/08	NP
Maurice Johnson	Director	12/06	NP
Alex Vayntrub	Director	12/06	NP

NP – not provided.

The Board meets the second Wednesday of each month at 6:30 PM. Meeting agendas are advertised in two local newspapers and posted on the District's office window five days before the date of the meeting.

– DETERMINATIONS –

1) Population and Growth

The Purissima Hills County Water District currently serves a population of 6,600 and is projecting a population of 6,731 in 2033. Increases in water demand are tied to both residential growth and concurrent increases in landscaping needs of new estate homes.

The population within the service area is not expected to increase significantly over time. Growth will occur primarily through the division of existing estate lots and new home construction.

2) Infrastructure Needs and Deficiencies

The Purissima Hills County Water District relies entirely on imported water from SFPUC for its supply. It only has one permanent intertie with Cal Water and one temporary intertie with Palo Alto that could serve the District in the event of an extreme water shortage. This is a potential infrastructure deficiency.

The District maintains eleven water storage reservoirs with capacity for 2.5 days at maximum day demand. The storage tanks also compensate for daily peaking and emergencies.

The District's infrastructure is reaching its design life expectancy and the District has been following a gradual program of evaluation and replacement of aging pipelines. The District's Capital Improvement Plan includes the rehabilitation of two zones within the District and replacement of one water storage tank.

The District is currently preparing an updated Water Supply Master Plan to identify infrastructure needs and deficiencies.

3) Financing Constraints and Opportunities

The District has established a rate structure that is sufficient to cover operating costs and funding for CIP projects.

The District finances major infrastructure projects out of water revenues and reserves; it has no long-term debt.

The District will be required to contribute the majority of its property tax revenue for FY 2004-2005 and 2005-2006 to the Educational Revenue Augmentation Fund. District reserves are sufficient to cover this reduction in revenue.

4) Cost Avoidance Opportunities

The District is avoiding costs through planning and the use of technology such as a GIS database, hydraulic models, and a SCADA system.

Due to the economic profile of the District's service area, demand levels are high and water conservation is difficult to achieve; increased water rates do not necessarily curtail excessive water use.

5) Management Efficiencies

The District is in the process of updating its Water Supply Master Plan which will allow the District to manage its service more efficiently.

The District operates with a small staff and has received few complaints over the past 12 months.

6) Shared Facilities

The Purissima Hills County Water District shares emergency intertie facilities with Cal Water and Palo Alto. The District is a member of BAWSCA and uses the functions of that agency to represent its interests with the SFPUC.

7) Rate Restructuring

The District uses a multi-tiered rate structure in an attempt to promote water conservation.

The District completed a rate study in 2004 that recommended increases ranging from 3 to 12% for each of the tiers. Rates will be adjusted accordingly. A sixth-tier will be added for high water users.

8) Government Structure Options

The Purissima Hills County Water District serves both incorporated and incorporated area in the County. Two government structure options were identified:

- **Maintain the status quo:** The District would continue to provide service within its current boundaries.
  - *Advantage*: The District is providing adequate service, has the support of the community, and no significant problems were identified.
  - *Disadvantage*: The option does not address the two parcels currently receiving service outside the District's boundary.

- **Annex the two parcels receiving service outside the District boundary:** The District's boundary would be expanded to include the two parcels currently receiving service.
  - *Advantage*: This allows for the District's boundary to be cleaned up to reflect the area being served.
  - *Disadvantage*: No disadvantages were noted; the District is currently serving the two parcels and has the infrastructure and supply to continue to serve them in the future.

9) Local Accountability and Governance

The Purissima Hills County Water District has a process for ensuring local accountability and governance. The elected board meets regularly and agendas are advertised in two local newspapers and posted.

D. SAN MARTIN COUNTY WATER DISTRICT

Overview

The San Martin County Water District is an independent special district providing water service in the unincorporated South County area of San Martin between Morgan Hill and Gilroy. The District serves 184 connections within a 0.71 square mile service area that is centered along San Martin Avenue east of Monterey Road. The District was established in 1988 when the former private water company that served the area entered into receivership. The District was formed under the County Water District Law (California Water Code §30000 et seq.). Its sole source of supply is groundwater.

1. Growth and Population

The San Martin County Water District (SMCWD) currently serves a portion of the San Martin Planning Area, east of Monterey Road and centered along San Martin Avenue. Land use within the District's boundaries is subject to the County's growth and development policies relating to rural unincorporated areas as well as those policies specific to the San Martin Planning Area. The District currently provides service to the following connections:

Connection Type	Count	Percent of Total
Residential	NP	NP
Commercial	NP	NP
Institutional	NP	NP
Total	184	100%

NP – not provided

The San Martin County Water District adopted a resolution stating that it is the District's goal to eventually serve the entire San Martin Planning Area east of Monterey Road. The policies established for the San Martin Planning Area include allowable residential densities using the County's "5-20 acre variable slope density formula." Portions of the area are going through a process of gentrification whereby larger homes are replacing the traditional smaller homes, which has slightly increased potable demand.

The County's General Plan Policy RD-6 states that urban types and levels of service shall not be available from either public or private service providers outside of cities' Urban Service Areas. Policy RD-7 states that if there is an unpreventable area-wide problem which can only be solved by extension of services by a special district, assessment district, or private utility, then that form of service may be approved with certain restrictions, i.e. that the amount of increased service capacity will not exceed the identified need and the planned level of development. The level of service capacity must also be consistent with that of other services provided or planned in the area.

Although growth within the area will be limited per the County's policies, demand for potable water service will steadily increase for the foreseeable future. Groundwater quality in the area is seriously impacted, both by nitrate levels due to septic systems and surrounding agricultural land use as well as by

perchlorate contamination from past manufacturing operations. The nitrate issue is primarily in the outlying areas; the District's main well regularly meets nitrate level standards for potable water and only requires treatment for perchlorate.

Outside the District's service area, the San Martin community is primarily served by West San Martin Water Works (a private company) to the west of Monterey Road and private or shared wells, small water systems or small mutual water companies in the rest of the area. The State Department of Health Services closely monitors the water quality of those systems within its jurisdiction and has ordered the Cherry Ranch Water Mutual Company in San Martin to disconnect its system due to nitrate levels. (The neighboring system, Candy Ranch Mutual Water Company, does not fall under State regulation due to the number of connections but has the same water quality conditions.) The SMCWD is contacted monthly by well owners asking for water service; there are no other large retail providers on the east side of Monterey Road that offer an alternative. Primarily from a public health standpoint, there will be a serious need for expanded treated water facilities in the San Martin area in order to provide water service to those with failed or at risk systems. Due to the extent and seriousness of the issue and physical requirements for the treatment process, water treatment is more appropriately provided through a public water agency rather than individual wells or small mutual water companies.

2. Infrastructure Needs and Deficiencies

The San Martin County Water District provides potable water treatment and distribution within its service area. The water system is comprised of the following:

Facility	Quantity
Pipelines	NP
Reservoirs (Tanks)	NP
Total Water Storage Volume	NP
Pump Stations	NP
Wells	NP
Total Well Pumping Capacity	NP
Pressure Zones	NP

NP – not provided

There are currently no un-served areas within the District's boundaries. All of the parcels have connections to the system although some owners are currently not using the District's water.

The District currently has one well and is planning to construct a new standby well in 2005. (The previous standby well was closed due to nitrate contamination.) The primary well has a capacity of 2,000 gallons-per-minute (GPM), far exceeding the current regular service demand of 86 GPM. This excess capacity was designed into the system to ensure adequate fire flow, even though the District is not required to provide water for fire suppression since it only has potable supply. The District has agreed to provide fire flow as there are no other providers in the area. The standby well will have an approximate

capacity of a few hundred gallons per minute, enough to serve the current potable needs of the District's service area in an emergency.

The District has not prepared a master plan and there are no projections on future total demand for the San Martin Planning Area. The District stated that it has adequate supply and capacity to serve the current potable water connections within the Planning Area.

The SMCWD's primary well and new standby well are located on the property of Camping World (the well was originally constructed by the firm as a condition of approval). The District's treatment facility, provided by the Olin Corporation, is adjacent. Olin was identified as the manufacturing operation that created the perchlorate contamination issue. The facility treats for perchlorate (nitrate levels are not an issue) and the treatment capacity matches the well production capacity.

It has not been determined how additional water treatment will be implemented for those not served by the District. Olin is currently providing bottled water to residents in affected areas. The State Department of Health is not in favor of Point-of-Use treatment systems as they require that a Certified Water Treatment Operator manage each system and the regulatory oversight will become increasingly cumbersome for the State to manage. If long term water treatment is to be provided through public water systems rather than private wells, there will be greater demand for services from the SMCWD for the area east of Monterey Road. Although treatment capacity may be adequate, the District's delivery and storage infrastructure would need to be expanded accordingly.

Within the past five years the District has made major improvements to its water system. A majority of the service area has been re-piped and there are only two projects still to be completed. The District has upgraded pipe sizes based on industry standards and projected future demand from the existing and potential connections. To illustrate the progress made in the past few years, the San Martin village area was served by a 2-inch main with no water service in the afternoon due to inadequate capacity and pressure. Most of those lines have now been replaced with 8-inch mains so that service is reliable. The western portion of the service area has a 12-inch main. Most of the future demand is expected to be in proximity to existing or planned pipelines.

As part of the re-piping program, the District is installing fire hydrants every 500 feet in keeping with County standards, and it plans to continue to install hydrants in the future along any new pipeline segment that has active water connections. No formal analysis or study has been conducted on how water deliveries would be temporarily impacted in the event of a major fire, although significant pumping capacity is in place to ensure adequate pressure and flow. Olin has also paid for two booster pumps that will maintain adequate pressure and flow in the event of a fire.

The SMCWD requires that owners of parcels which benefit from a service extension are required to pay for the improvements, to the level required to adequately serve the new area. The District uses the opportunity to upgrade pipe size where it is expected that future demand will require greater pipeline

capacity. The incremental cost increase for the larger pipe size is borne by the District. Some of the costs are recouped as connections are added to each particular pipeline.

The District noted that it has also undertaken a program in the past five years to repair or replace meters where the readings were consistently inaccurate.

The SMCWD currently relies on its main well for supply. In genera, public water systems are expected to have two sources of supply. The District has an agreement with West San Martin Water Works, Inc. for the company to provide water to the SMCWD in an emergency. An existing valve between the two systems had been closed as a result of the lawsuit between the two purveyors, but relations have improved and the company has agreed to assist if needed.

Water Storage

The District currently has one 5,000-gallon storage tank. The District recognizes the need for more storage capacity in the future, and an elevated site that would offer gravity flow would greatly improve service reliability. The service area is almost entirely flat and the current water delivery system is pressure flow, making the District completely dependent on power service from PG&E for pumping. (Each of the wells has its own generator.) The District has identified an elevated site within a park to the east for a new one million gallon reservoir tank. All of the agencies which would have oversight authority for this facility – County Health Services, Fire and Parks – are in support of the proposed plan. The primary constraint is funding, and the District projects that this project may be five years away from implementation.

Water Demands

The District provides potable water for a variety of uses, including residential, commercial, and industrial. No agricultural water service is provided. The District does not have a water conservation program. Demand within the District's service area is as follows:

Demand	Quantity
Existing Average Annual Demand	NP
Existing Maximum Day Demand	NP
Existing Peak Hour Demand	NP
Build-Out Average Annual Demand (2020)	NP
Build-Out Maximum Day Demand	NP

NP – not provided

Water Supply

The San Martin County Water District relies on groundwater extracted from the Llagas Sub-basin, which is managed by the SCVWD. In Calendar Year 2003, the SMCWD extracted the following volume:

Supply	Current Volume	Percent of Total
SCVWD – groundwater	137.02 AF	100%
Total	137.02 AF	100%

Per SCVWD records

The San Martin County Water District, Morgan Hill, Gilroy, and West San Martin Water Works all share the same groundwater basin. Because these agencies are all relying on the same source of supply, it is essential that they coordinate, along with the County, on planning efforts and water supply related issues. Groundwater quality is of critical concern, particularly with the use of septic systems in the San Martin area and previous manufacturing land use in the South County region. Septic systems and agriculture are known to increase nitrate levels in groundwater. If land use intensifies in the San Martin area, an increased volume of wastewater could exacerbate the existing problem of high nitrate levels.

Perchlorate contamination from previous manufacturing operations further north has been identified in the water produced from the SMCWD's main well. The San Martin County Water District participates in the Perchlorate Community Advisory Group, along with the SCVWD, elected officials and community members. Community Advisory Groups are established by the Regional Water Quality Control Board as a means for the community to be involved in major water quality issues and have a voice before the Board. The District is not involved in the Perchlorate Working Group as the District has reached an agreement with Olin.

Recycled water is not available within the District's service area, and there are no plans to extend this service from the South County Water Recycling Authority treatment facility in Gilroy.

Summary

The San Martin County Water District serves an area with significant water service issues. The San Martin relies on groundwater; however this source has been contaminated by both nitrates and perchlorate and all water for domestic use must be treated. The District's main well does not have nitrate issues but does require treatment for perchlorate. The District's water treatment facility has the capacity to match the production of the District's main and secondary wells. In the past the San Martin County Water District's infrastructure was substandard and unable to adequately serve the needs of the community. However, in the past five years the system and service levels have significantly improved.

3. Financing Constraints and Opportunities

The following table summarizes the District's financial performance in FY 2003-2004:

San Martin County Water District – FY 2003-2004 Financial Summary			
Revenue -	Water Sales	$143,441	98%
	Interest Income	$141	0%
	Water Service Connection	$3,000	2%
	Total	$146,582	100%
Expenses -	Water Purchases*	$22,708	24%
	Transmission/Distribution	$37,493	39%
	Admin/Management/General	$35,675	37%
	Total	$95,876	100%
Net Income		**$50,706**	
Reserves	At year end	$96,879	

SCVWD pump tax

The District initially operated with little or no reserves. As part of the overall effort to improve the District's management and financial condition, the Board of Directors adopted a resolution to establish a minimum reserve level of $50,000. As of February 2005, reserves are approximately $130,000.

There are two long-term debts associated with the District. The first was a loan from the California Department of Water Resources in 1995 for $597,450. The proceeds of the loan along with State grant funding were used to acquire the infrastructure and the main well as part of the District's formation. The 30-year loan will be paid in full in 2025. Annual payments are approximately $16,000, including principal and interest. The principal balance currently stands at $458,005. A benefit assessment district was established at the time, and 186 parcels are assessed annually on the property tax bills. The County collects the assessments and makes the annual payment to the State.

The second long-term debt was a loan from the County in 1999 to settle the lawsuit with West San Martin Water Works and acquire the Ukested Water Supply. The 10-year loan will be paid in full in 2009. The District borrowed $60,000; the current principal balance is $36,000. The District pays a fixed principal amount every year ($6,000) with a variable interest rate. The District considered paying the loan off early; however the County is charging a favorable interest rate of approximately 1% and the District decided to continue with the loan for the time being.

In the future the District plans to finance improvements through reserves and grant funding using a "pay as you go" approach. It is the District's policy that the cost for service extensions are paid for by the benefiting parcels. Any further new connections along that pipeline are charged a connection fee, and the original parcels are entitled to recover a portion of their costs. This approach ensures that the funding is in place prior to the District extending service, and it also ensures that the costs are borne by the appropriate parties rather than all of the District's customers.

4. Cost Avoidance Opportunities

The San Martin County Water District is aggressively avoiding costs where possible. The current size of the District does not warrant full time staff; therefore the District is managed and operated by contract, avoiding the costs associated with personnel. Based on industry standards, the District expects that economies of scale will be realized when the District reaches 300 connections and it will be able to support a fulltime staff member.

The District is avoiding the costs for future capacity upgrades by using pipelines sized to adequately serve expected future demand in a given area. For example, if a new service extension only requires a 6-inch pipe, the District may upgrade the size to 8-inches (based on future demand projections) to avoid future capital improvements. In addition, the District requires the beneficiaries to pay the cost for any service extension.

5. Management Efficiencies

The San Martin County Water District contracts for management services with a company that specializes in managing public water systems. The management company has four staff, each with advanced certifications for water system operations and treatment. One of the staff is directly responsible for the San Martin system. This management approach is highly efficient for the District as the system size does not warrant full time staff. The management company has significant experience in improving substandard systems and dealing with water treatment for multiple contaminates.

6. Shared Facilities

The San Martin County Water District has had limited opportunities to share facilities in the past. Opportunities may increase through collaborative water service planning with Morgan Hill, Gilroy, the SCVWD, and West San Martin Water Works. The agencies providing water in the South County region share common concerns for groundwater cleanup, long-term groundwater quality, growth and development. At some point in the future imported water may be provided to the South County region, and it will be important that all of the water purveyors are working collaboratively on managing the region's water supplies. The San Martin County Water District will be an important stakeholder in this effort.

7. Rate Restructuring

Supply Rates

The groundwater pump tax rates imposed by the SCVWD are an ongoing concern for the San Martin County Water District. The pump tax is paid to the SCVWD in exchange for groundwater recharge services and is currently set at $200 per acre foot. The current rate includes a 25% increase over prior year rates. Most retailers of the SCVWD are expecting the pump tax rate to continue to increase significantly over time, which will result in rate increases for the end users. This will directly impact San Martin's retail rates as the San Martin County Water District has approved a rate structure that includes automatic increases whenever the SCVWD imposes any fees or rate changes.

Demand Rates

The San Martin County Water District has only increased rates once in ten years; the last rate increase was in 2002. The current SCVWD tax component was updated July 1, 2004 when the pump tax rates changed. The District has a two-tiered rate structure with the split at 5 units. A base rate is charged, which covers meter reading and replacement, billing, collection, quality testing, administration and distribution maintenance.

For comparison to other water agencies, a typical demand of 20 CCF has been used throughout this report. Using 20 CCF and a ¾" meter, the monthly bill for a customer of the San Martin County Water District would be as follows:

Charge	SMCWD Rate	SCVWD Tax Rate	Total
Base Rate			$20.00
Tier 1 – 5 CCF	$1.70/unit	$0.46/unit	10.80
Tier 2 – 15 CCF	$2.15/unit	$0.46/unit	39.15
Total			**$69.95**

8. Government Structure Options

The San Martin County Water District's boundary is not coterminous with its Sphere of Influence. The SMCWD is currently serving the area within its boundaries as well as nine parcels outside its boundaries (three are for County facilities). These parcels are noted on the map following this section. LAFCo is aware of these areas and will address them as part of the District's sphere update.

There has been discussion in the recent past regarding incorporation of the San Martin area. The proponents have indicated that they would utilize service from the existing water providers; however LAFCo can approve, deny, modify or approve in part an incorporation proposal brought before it. To date, a formal application for incorporation has not been filed with LAFCo.

The San Martin County Water District stated that it would like its service area and Sphere of Influence to be expanded such that they would include all of the San Martin Planning Area east of Monterey Road. The District does not want to piece-meal applications through LAFCO over the next several years but would rather complete the process through one application. The District would like to have its boundaries established such that it is able to respond quickly when a mutual water system has been ordered by a regulatory agency to cease operations, or when water quality in private or shared wells is too far degraded for further use. There is a major push by the State to merge small water systems, due to increasing regulations and the sheer administrative cost and effort to monitor them. As this trend continues, there will likely be increasingly more requests for service from the District. The District estimates that within the San Martin Planning Area, there are approximately 15 water systems with five or more connections and over 100 shared wells.

It is important to note that there are a number of issues that would have to be evaluated when considering a boundary change for the District. These include future demand and infrastructure capacity, growth inducing impacts and other environmental issues.

The San Martin County Water District is working with the Cherry Ranch Mutual Water Company on their request to connect their system, which serves 17 parcels, to the SMCWD system. As mentioned earlier, this mutual has been ordered by the State to disconnect its system due to high nitrate levels. The area is approximately one-mile from an existing District pipeline in Center Avenue. To demonstrate good faith to the State and delay the start of penalties, the Cherry Ranch property owners have been collecting assessments for the past year in order to pay for the pipeline. They are reaching the point where they are ready to move forward. The District has informed the property owners that service extensions such as this will require LAFCo approval. However, to date LAFCo has not been approached regarding this issue.

Directly across the street from Cherry Ranch is another mutual, Candy Ranch, with five parcels. Due to its size it is not regulated by the State and therefore has not received orders to disconnect. The per-property cost of a pipeline extension would drop significantly if both mutuals were able to participate. Existing SMCWD customers along the pipeline route would be offered the opportunity to connect, which would lower the individual cost for each landowner. The District is working with the two mutuals, as well as other property owners along the pipeline, to try to maximize the pipeline potential and reduce the costs.

Several government structure options were identified for the San Martin County Water District. (A study area map depicting the District's current boundary, out of agency service areas and the San Martin Planning Area boundary follows.)

1. Maintain the status quo

This option would allow the District to continue its operations with no changes to its boundaries. The current areas served outside District boundaries as well as the Cherry Ranch mutual could be covered by out-of-agency agreements. The advantage to this option is continuity of service. The District is providing adequate services, has the support of the community and no significant problems have been identified. The disadvantage is that it does not address the issues at hand: 1) providing efficient, potable water service to an area that has critical public health issues, and 2) providing water service outside District boundaries without LAFCo approval. The San Martin area has dire water quality issues; the District has excess water supply and system capacity and could serve a larger area. Maintaining the same governmental structure would not alleviate any of the conditions in the San Martin area.

2. Dissolve the San Martin County Water District

The San Martin County Water District could be dissolved, allowing a larger mutual water company or private water purveyor to serve the area. This would provide little if any benefit to the local residents, other than to relieve them of responsibility for LAFCo approvals. The disadvantage is that currently there

is no other service provider in the area. Given the critical environmental conditions and the doubtful prospects for incorporation of the San Martin area, it would be beneficial to have a public agency providing leadership in the provision of water service to the San Martin area. A private purveyor would be subject to the authority of the California Public Utilities Commission, which regulates rates and sets system standards. However, it is unlikely that a private company would accept the legal liability associated with serving an area dependent on groundwater given the current groundwater contamination issues.

3a. Annex the areas served by the current out-of-agency connections

This option would expand the boundaries of the San Martin County Water District to include the out-of-agency areas currently being served. The advantage of this is that it would clean up service area boundaries. The disadvantage is that it does not address the issue of providing efficient, potable water service to a broader area that has critical public health issues. This option may only offer a short-term solution given the ongoing water quality issues in the area and the State's direction towards bringing smaller privately-operated systems into larger public systems.

3b. Annex the Cherry Ranch and Candy Ranch Mutual Water Companies

This option would expand the boundaries of the San Martin County Water District to include the two water mutuals located near the intersection of Middle and Center Avenues, approximately one mile from an existing District pipeline. The advantage of this option is that it would solve a public health issue by providing service to an area that has serious water quality issues and no other options for water service other than on-site treatment. This would provide the opportunity for existing water users located along the extension to connect to the system. The District would also be installing fire hydrants along Center Avenue, providing public safety benefit. The disadvantage is that it does not address the larger water quality issue present in the San Martin area.

4. Expand the District's boundary to include the entire San Martin Planning Area east of Monterey Road

This option has significant advantages, including economies of scale, service efficiency, and greater local accountability to the residents of San Martin. The District has indicated that it has the water supply and treatment/pumping capacity to serve the current needs of the area. (The District noted that it is only interested in providing service to existing development and those properties along pipelines serving those areas, not remote single parcels outside the Planning Area.) There are no other identified providers in the area that could serve the San Martin area in a similar manner.

The disadvantage is that there is inadequate data to determine whether this option is appropriate at this point in time. Potential issues that would need to be evaluated include projected water demand, water system capacity and infrastructure needs; permits; growth inducement; and the impacts on existing land uses. This would all have to be evaluated within the context of the County's General Plan, the South County Area Joint Plan and the San Martin Planning Area policies, and LAFCo policies. The District requires that all costs for service extensions be borne by the benefiting parcels, so the financial impact to

the District's existing customers would be limited with the exception of costs associated with District-wide improvements such as storage facilities. No formal analysis or studies have been conducted to determine the projected water demand for a public water system in the San Martin area over the next twenty years; trends such as development, gentrification, and the discontinued use of privately owned wells would need to be factored in. Although the District noted that it would only serve existing water users, the potential for new connections in the vicinity of any current or planned District facilities must be considered.

The San Martin County Water District's sphere will be reviewed and updated by LAFCo in the near future. In order to adequately complete this analysis in a timely manner, additional information from the District will be required. The District's willingness to participate in this process will provide evidence of its long-term commitment to serving the San Martin community.

9. Local Accountability and Governance

The District is governed by a five-member Board of Directors; however two seats are currently vacant. The current board of the San Martin County Water District is as follows:

Board Member	Title	Term of Office	Compensation
Omar Hindiyeh	President	2005	none
Don Popma	Board Member	2005	none
Ray Souza	Board Chair	2007	none
Vacant		2007	
Vacant		2007	

The Board meets the third Tuesday of each month at 5:30 PM. Meetings are held at the Aircraft Museum at 12777 Murphy Avenue in San Martin. Meeting notices are distributed with each billing as well as posted at the US Post Office and the payment drop-off box in a local store. Board members are required to attend meetings for three months prior to being seated on the Board.

Although the San Martin County Water District has been dysfunctional in the past, it has improved its operations and level of service significantly in the past five years. However, given the critical groundwater issues and expected growth in the region, it will be important for this District to continue to strengthen its financial resources and governance.

It is important that the Board of Directors fill the vacancies as soon as possible. This could be accomplished through a request to the Board of Supervisors to appoint members in lieu of incurring special election costs. The District noted that it is actively seeking new board members.

Insert San Martin Planning Area / San Martin County Water District Map

– DETERMINATIONS –

1) Population and Growth

The San Martin County Water District currently serves a portion of the San Martin Planning Area, east of Monterey Road and centered along San Martin Avenue.

Growth within San Martin is expected to occur at a much slower rate than the incorporated areas within the South County due to its rural designation and County policies.

The majority of the expected increase in demand for water services will be driven by water quality issues and failed private or mutual water systems rather than population growth.

2) Infrastructure Needs and Deficiencies

The San Martin County Water District relies on groundwater extracted from the Llagas Sub-basin for its source of water supply.
Groundwater quality is a concern. A majority of the San Martin area is impacted by nitrate levels that exceed allowable limits and by perchlorate contamination.

The District has a water treatment facility provided by the Olin Corporation to treat perchlorate contamination. The District's well does not have nitrate issues and treatment for nitrate levels is not required.

The District has nearly completed a major re-piping project, bringing pipeline sizes up to industry standards and establishing acceptable levels of service.

The District's water supply and treatment capacity are adequate to serve the demands of the District's current service area.

3) Financing Constraints and Opportunities

The San Martin County Water District has established a minimum reserve level of $50,000. Operating revenue has been sufficient to increase reserves annually for the past several years.

There are two outstanding long-term debts associated with infrastructure acquisition and improvements for the formation of the District and purchase of the Ukested Water Supply as settlement for a lawsuit. The District now uses a "pay as you go" approach, financing the majority of infrastructure projects out of reserves and grant funding.

4) Cost Avoidance Opportunities

The District is avoiding costs through the use of independent contractors to manage and operate the system.

5) Management Efficiencies

The San Martin County Water District contracts for management services with a company that has significant expertise in operating local water distribution and treatment systems. This has resulted in measurable improvements in the District's operations, rate structures, and financial condition.

6) Shared Facilities

The San Martin County Water District has had limited opportunities to share facilities. Opportunities may increase through future collaboration of the public and private water providers in the South County.

7) Rate Restructuring

The District adopted a two-tiered rate structure in 2002 that includes an automatic rate adjustment based on any fees or rate increases imposed by the SCVWD.

8) Government Structure Options

Several government structure options were identified for the San Martin County Water District:

- **Maintain the status quo:** The District would continue to provide service within its current boundaries.
  - *Advantage*: This option allows for continuity of service; no other public agency was identified that could provide the same service levels as the District.
  - *Disadvantage*: The option does not address the water quality and public health issues in the San Martin area or the out-of-agency service that is currently being provided.
- **Dissolve the San Martin County Water District:** The District would be dissolved and its assets would be acquired by a successor entity such as an investor-owned water company or mutual water company
  - *Advantage*: This option would provide minimal benefit other than to relieve the water purveyors and residents from the responsibility of LAFCo approvals for additional service areas.
  - *Disadvantage*: There is no other public agency service provider in the area that could maintain the existing service levels; the San Martin area would have to be served by a privately owned water purveyor or mutual water company.
- **Annex the areas served by the current out-of-agency connections:** The nine parcels outside the District's boundaries that are currently receiving service would be annexed to the District.
  - *Advantage*: This option would clean up the District's service area boundaries.
  - *Disadvantage*: This option does not address the larger issue of water quality and public health in the San Martin area. It may only provide a short-term solution given the ongoing water quality issues and the State's movement towards consolidating smaller, privately operated systems with larger public water systems.
- **Annex the Cherry Ranch and Candy Ranch Mutual Water Companies:** The District's boundaries would be expanded to include the two water mutuals located near the intersection of Middle and Center Avenues, approximately one mile from an existing District pipeline.

- *Advantages*: This option would resolve a serious public health issue and pending loss of water service for the Cherry Ranch Mutual Water Company. The Candy Ranch Mutual Water Company has similar water quality issues but has not been ordered to disconnect its system. This would also provide public safety benefits through the installation of fire hydrants along the pipeline reach in Center Avenue.
- *Disadvantage*: This option does not address the broader issue of water quality and public health in the San Martin area. It provides a solution for the two water mutuals but not for the remainder of the San Martin area.

- **Expand the District's boundaries to include the entire San Martin Planning Area east of Monterey Road**
  - *Advantages*: This option could provide economies of scale, service efficiency, and greater local accountability to the residents of San Martin. There are no other public agencies in the area that could serve the San Martin area in a similar manner.
  - *Disadvantage*: There may be unintended impacts as current data is inadequate to determine whether this option is appropriate at this point in time. Further analysis would be needed to evaluate projected water demand, water system capacity and infrastructure needs; permits; growth inducement; and the impacts on existing land uses. All this would need to be considered within the context of the County's General Plan, the South County Area Joint Plan and the San Martin Planning Area policies, and LAFCo policies.

9) Local Accountability and Governance

The San Martin County Water District is governed by a locally elected Board of Directors. The Board currently has two vacancies; these positions can be filled by special election or appointment by the County Board of Supervisors.

E. PACHECO PASS WATER DISTRICT

Overview

The Pacheco Pass Water District is an independent special district that lies within both Santa Clara and San Benito Counties. Its primary purpose is to capture, store and release local surface water in order to recharge the groundwater in the area. The District was established in 1931 under the California Water District Law (California Water Code §34000 et seq.).

The Pacheco Pass Water District is a cross-county agency with 80% of the District located in San Benito County. San Benito LAFCo is the principal LAFCo for determining the sphere of influence for the District, and therefore Santa Clara LAFCo is not asked to adopt determinations for this District. Pacheco Pass Water District is included in the report to ensure a comprehensive review of water service in Santa Clara County.

1. Growth and Population

The Pacheco Pass Water District is located adjacent to Highway 156. Land use in the area is almost entirely ranchland per the County's General Plan. The District noted that San Benito County is rapidly urbanizing, stemming from development pressure within Santa Clara County. The District's function is to provide the water supply for natural groundwater recharge through reservoir storage and release. The District noted that it expects future growth to have no effect on demand from the District's facilities.

2. Infrastructure Needs and Deficiencies

The infrastructure of the Pacheco Pass Water District consists of two dams and their adjacent reservoirs. The State Department of Water Resources inspects the dams two to three times per year. The Los Viboroas Dam is in good condition and has the capacity to store 500 acre-feet of water. The North Fork Dam was built in 1936 and has a capacity to store 6,000 acre-feet of water. Major repairs were completed in mid-2004 related to valve replacement and improvements were also completed on the spillway.

The District does not have a Master Plan or Capital Improvement Plan. The State has informed the District that the North Fork Dam will need an estimated $400,000 in repairs within the next five years. The District did not provide specifics on what the repairs would entail.

The District noted that the SCVWD had approached them at one point regarding expanding the reservoir's capacity to 18,000 – 20,000 acre-feet. The Pacheco Pass Water District's Board of Directors was adamantly opposed, perhaps over concern that the District could lose its water rights and no longer provide adequate recharge for San Benito County.

Water Supply

The District's reservoirs are designed to collect and store local surface water from Pacheco Creek and naturally occurring runoff.

3. Financing Constraints and Opportunities

The Pacheco Pass Water District's primary source of revenue is property tax with a small increment of interest. The following table summarizes the District's financial performance in FY 2003-2004.

Pacheco Pass Water District – FY 2003-2004 Financial Summary			
Revenue -	Property Taxes	$21,610	99%
	Interest	$1,618	1%
	Total	$23,228	100%
Expenses -	Admin/Management/General	NP	
	Capital Improvements	NP	
	Total	NP	
Reserves			745% of Revenue

NP – not provided

The District was formed prior to the passage of Proposition 13. When it was created it received a dedicated share of property tax revenues from the properties within its boundaries. Subsequent to the passage of Proposition 13, the District now receives a dedicated share of the 1% property tax. This revenue source is its only source of income except interest.

Per the State budget act of 2004, the Pacheco Pass Water District will be required to contribute to the Educational Revenue Augmentation Fund based on its property tax revenue. This amount is estimated to be $2,433 for FY 2004-2005, approximately 10% of its total income using a base year of FY 2001-2002. This is a significant loss in revenue; however, the District has sufficient revenues to cover this impact on a short term basis.

The District noted that due to the State's fiscal crisis, it has seen mandatory dam fees increase dramatically. The District used to pay an annual fee of $2,300 to the State; that fee is now $10,080. They are exploring grants and other financial opportunities, particularly in light of the estimated $400,000 in dam repairs that will needed within the next five years.

The District maintains reserves for both operations and capital improvements. Operating reserves were approximately $25,700 and capital reserves were $157,000 at the end of 2003. The District does not have any long-term debt.

4. Cost Avoidance Opportunities

No cost avoidance opportunities were noted.

5. Management Efficiencies

The Pacheco Pass Water District operates with the following staff:

Staff Type	Number FTE's
Management/Administrative	.5
Operational (Water Masters)	1.0
Total	1.5

The District has three part-time staff members. The District was audited by an independent auditor as of June 30, 2003, and there results were not qualified in any way.

6. Shared Facilities

The Pacheco Pass Water District shares facilities with other agencies as appropriate. The District is participating as a stakeholder in the SCVWD's San Luis Reservoir Low Point Improvement Project.

7. Rate Restructuring

The Pacheco Pass Water District does not purchase any water or charge any user fees.

8. Government Structure Options

The majority of the Pacheco Pass Water District is located in San Benito County, and San Benito LAFCo is the principal LAFCo. The District noted that if any change were to be made, it would consider reorganizing with the San Benito County Water District. The San Benito LAFCo would be the lead on any change. Santa Clara LAFCo should be notified of any applications or pending changes that might affect the area within its jurisdiction.

9. Local Accountability and Governance

The Pacheco Pass Water District is governed by a five-member Board of Directors; Directors are elected at large to serve staggered four-year terms. In the November 2004 election, only one incumbent ran for re-election while the terms for three board members expired. The current board of the Pacheco Pass Water District is as follows:

Board Member	Title	Term of Office	Compensation
Sam Lomanto	Director	2008	None
Allison Rohnert	Director	2006	None
Louis Scaglione	Director	2006	None
Elliott Swank	Director	2008	None
Michael O'Connell	Director	2008	None

The District does not have a regularly scheduled meeting time. The Board meets as needed. Meeting agendas are posted in advance at the San Benito County courthouse.

F. GUADALUPE-COYOTE RESOURCE CONSERVATION DISTRICT

Overview

The Guadalupe-Coyote Resource Conservation District (RCD) provides a range of conservation and watershed-related services to both rural and urban areas within the northern portion of Santa Clara County. Although it does not provide water service, the RCD's programs support environmental awareness and watershed stewardship, including the protection of local water resources. The RCD serves a 565 square mile area that encompasses most of the foothills and mountainous land surrounding the Santa Clara Valley north of Morgan Hill. The RCD originated from two separate Soil Conservation Districts, Evergreen and Black Mountain, formed in the early 1940's by election of the landowners. The two districts consolidated in 1977 and in 1995 the name was changed to the Guadalupe-Coyote Resource Conservation District to reflect the two watersheds it serves.

Resource Conservation Districts are authorized under Division 9 of the California Public Resources Code. The Guadalupe-Coyote RCD operates pursuant to Public Resources Code §9001 et seq. which states that the division is enacted for the following purpose:

> *(a)(2). To provide for the organization and operation of resource conservation districts for the purposes of soil and water conservation, the control of runoff, the prevention and control of soil erosion, erosion stabilization, including, but not limited to, these purposes in open areas, agricultural areas, urban development, wildlife areas, recreational developments, watershed management, the protection of water quality, and water reclamation, the development of storage and distribution of water, and the treatment of each acre of land according to its needs.*

The RCD has established a set of comprehensive goals, objectives and implementing actions to carry out its mission within the County. Goals include the following:

- Increased Participation in Watershed Management
- Floodplain Management Improvement
- Riparian Corridor Management Improvement
- Waterway Protection and Restoration Improvement
- Increase Habitat Preservation Efforts
- Increase Erosion/Pollution Prevention Efforts
- Farm/Range Land Management Improvement
- Promote Pesticide, Herbicide and Chemical Alternatives
- Promote Improvements in Soil Fertility in a Sustainable Manner
- Promote Responsible Invasive Species Control
- Promote Native Species Protection and Information Dissemination
- Promote Preservation of Important Farmland
- Promote and Conduct Scientific Studies/Education
- Promote Proper Stream Design

Programs and Services

The RCD provides services on several levels, including programs and project implementation as well as involvement in larger planning/policy efforts in the County. Based on its history of soil conservation, the underlying emphasis for the RCD's efforts is on reducing sediment in streams in order to ensure their natural functions and reduce future maintenance needs and costs. The RCD is actively engaged in initiatives, programs and projects that support the goals noted above, including the following:

- **Watershed Management:** The RCD participates in the Santa Clara Basin Water Management Initiative (SCBWMI) where the primary effort is to develop a Watershed Management Plan. A large number of stakeholders, representing a range of public and private interests are involved. The SCBWMI includes several subgroups such as watershed assessment, land use, flood management, and data management. The RCD has representatives participating in each of the subgroups and is evaluating the means to increase their involvement.

- **Floodplain Management:** The RCD views floodplain management as a critical component of a larger watershed management effort. The RCD provides input to city and County planners on the need for responsible floodplain management and participates in the SCVWD Flood Zone meetings (the SCVWD is the responsible agency for flood control in Santa Clara County). The RCD monitors flood control projects, including assessing completed projects to assure they are in compliance with conservation goals and are functioning per the permit requirements, primarily from a watershed benefit perspective. In certain instances the RCD's assessment of a project may be different than that of the SCVWD. For example, the RCD noted in its 2003 Annual Report that it is concerned that the flood control projects on the Guadalupe River are not working per the design specifications or as presented in the environmental documents, and the RCD has made an effort to document the issue. The majority of the SCVWD's natural flood protection projects are done through the *Clean, Safe Creeks and Natural Flood Protection* program; the special tax approved by voters to fund the program included a provision for an independent oversight committee comprised of volunteers. This committee meets regularly to monitor and report on the SCVWD's projects, and project issues noted by the committee are considered by the SCVWD and addressed appropriately. This committee's responsibilities and duties are not the same as the RCD's oversight and monitoring work. The RCD uses technical equipment to collect data and to measure and monitor stream functions and projects. Data collection occurs through on the ground field sites; additionally the RCD uses video and photos to document projects.

  The RCD's "watchdog" efforts in some ways duplicate those of the volunteer committee. However some stakeholders believe there is value in having this additional oversight, particularly given the critical role the creeks and streams have in the watershed for flood protection, water resources and

habitat. The RCD sees itself as fulfilling an important role to monitor projects and verify that there is maximum benefit to the watershed and beneficial uses.

- **Education:** The RCD sponsors educational workshops to educate professionals and public agency staff on technical topics related to watershed management and stream functions. The RCD seeks out experts in watershed-related fields from across the United States to lead the sessions; the sessions are held at the SCVWD and the registration fees cover the costs. For example, in 2003 an intermediate level class was conducted on Applied Fluvial Geomorphology led by two noted professors from Colorado State University. The RCD's goal in this effort is to increase the level of knowledge and understanding of watershed functions for those planning and designing projects within Santa Clara County. Grants are provided to those unable to attend due to cost.
  The RCD also co-sponsors soil contests for high school students with the Loma Prieta RCD. The RCD has a cooperative educational program with the Children's Discovery Museum in San Jose.

- **Watershed Studies and Projects:** In addition to its programs, the RCD is involved in watershed studies. The first is the Santa Clara County Fisheries and Aquatic Habitat Collaborative Effort (FAHCE) that includes participants such as the SCVWD, California Department of Fish and Game, National Marine Fisheries Service, US Fish and Wildlife Service, and the City of San Jose. (The FAHCE Settlement Agreement resulted from the RCD bringing a complaint against the SCVWD because its operations were adversely impacting the Beneficial Uses such as coldwater fisheries.) This project will address cumulative impacts on salmon and steelhead and their habitats on the Guadalupe River, Coyote Creek, and Stevens Creek. The RCD also co-sponsored the Lower Silver Creek Watershed Project with the SCVWD and the USDA Natural Resources Conservation Service (NRCS). This project involved restoring 19 reaches of the channelized creek to their natural state.

  The RCD has also received grant funding to collect data on the hydrology of the upper reaches of several creeks within its service area.

- **Conservation Services:** Through a Memorandum of Understanding with the NRCS, the RCD utilizes the services of an NRCS conservationist to work closely with the Board of Directors in implementing the RCD's programs. Part of this effort includes providing resource conservation information to individuals, schools and government entities and providing resource conservation assistance to individual landowners.

  The RCD provides small grants as well as information to those landowners who wish to eradicate new exotic species of invasive weeds on their acreage at the stage where it can be easily eradicated.

The District's boundary and Sphere of Influence are coterminous. A District map is shown on the following page.

Insert Guadalupe Coyote RCD map

1. Growth and Population

The Guadalupe-Coyote RCD serves the northern portion of Santa Clara County extending from north of Morgan Hill to the San Francisco Bay. Within the RCD's boundaries are portions of the cities of San Jose, Palo Alto, Los Altos, Los Gatos, Saratoga, Los Altos Hills, Cupertino, Campbell, Milpitas and Monte Sereno. Much of the urban area within the northwest portion of the County is excluded. The RCD's service area is generally expected to have moderate growth, with the exception of the Coyote Valley area where a high rate of growth is projected.

The RCD's services provide benefit to both rural and urban interests. Land use within the RCD's service area has changed significantly, moving from primarily agricultural to a mix of uses represented today. Following the State's lead, the RCD's mission and goals have changed as well, encompassing a more comprehensive vision for watershed management while still providing practical conservation assistance for landowners including erosion control measures, livestock watering systems, irrigation water systems, range improvement practices and use of cover crops fro orchards and vineyards.

Northern Santa Clara County is highly dependent on the quality of its local surface water sources as well as groundwater recharge opportunities and flood protection along the creeks. Although population growth may not be significant overall, as land use intensifies in the region there will be an increased demand for services related to conservation and watershed stewardship.

2. Infrastructure Needs and Deficiencies

The Guadalupe-Coyote Resource Conservation District does not own or maintain any infrastructure, nor manage any water supply.

3. Financing Constraints and Opportunities

The Guadalupe-Coyote Resource Conservation District is funded by its share of the 1% property tax as well as interest income. Revenue and expenditures as reported to the State Controller and included in the financial statement are shown below:

Guadalupe-Coyote Resource Conservation District – Financial Summary				
		FY 2000-2001	**FY 2001-2002**	**FY 2002-2003**
Revenue -	Property Tax (1%)	$94,613	$109,826	$109,204
	Interest Income	$6,404	$5,586	$3,165
	Intergovernmental – State	$1,145	$1,156	$1,169
	Governmental Aid			$5,122
	Total	$102,162	$116,568	$118,660
Expenses -	Salaries, Wages, Benefits	$8,529*	$53,277	$52,928
	Services and Supplies	$44,598	$44,325	$78,086
	Total	$53,127	$97,602	$131,014
Net Income		$49,035	$18,966	$(12,355)
Fund Balance (June 30)		$139,779	$156,948	$146,299

**Note: The salary in FY 2000-2001 reflects a part time position; volunteers provided the additional labor needed for district functioning.*

The RCD was formed prior to the passage of Proposition 13. When it was created it received a dedicated share of property tax revenues from the properties within its boundaries. Subsequent to the passage of Proposition 13, the RCD now receives a dedicated share of the 1% property tax.

The RCD's Board of Directors has taken a conservative approach to managing its finances; holding an average of $148,000 in reserves with the County Treasurer over the most recent three-year period. The RCD has an adopted Long Range Plan that includes programs and projects it intends to implement over a five year period. However in discussions with RCD staff, there was a general consensus that finances were limited and the RCD had to carefully manage its expenses.

Guadalupe-Coyote does not have any capital assets and does not plan to acquire any. The FY 2004-2005 budgeted expenses equal $240,000, including $69,531 for projects within the Guadalupe Watershed. The RCD noted in discussions that it had been awarded a $50,000 grant in 2003 through the CALFED program to collect hydrology measurements on the upper reaches of several creeks in order to provide a record of existing conditions that can be coupled with historic data. This compilation can then be used in planning for any improvements or flood protection projects. The other major expenses are $35,000 for seminars, workshops and conferences and $16,000 for educational outreach. If these expenses are incurred as budgeted, the RCD's reserves will be used to fund the revenue shortfall.

Per the State budget act of 2004, the Guadalupe-Coyote Resource Conservation District will be required to contribute to the County's Educational Revenue Augmentation Fund in both FY 2004-2005 and 2005-2006. The County Auditor-Controller will reduce the RCD's annual tax increment by the required contribution amount. The RCD's estimated contribution is $10,982.60 for FY 2004-2005. Given the RCD's reserve level, it should be able to accommodate this reduction in revenue with little impact to the programs and services it provides.

The RCD is audited annually for the State Controller's Report and audited every two years for its regular audit. The audit for the year ending June 30, 2003 was not qualified in any way.

4. Cost Avoidance Opportunities

The Guadalupe-Coyote Resource Conservation District operates with one full-time staff and volunteers. The RCD has the County Board of Supervisors appoint board members in order to avoid the costs of an election. In addition, the Associate Directors of the RCD perform volunteer work.

5. Management Efficiencies

The Guadalupe-Coyote Resource Conservation District is managed by one fulltime staff member directed by the RCD's Board. All of the RCD's activities are related to its goals, and each of the goals has objectives and identified actions for implementation. An annual report is prepared summarizing actions taken under each goal and the status of each of these action items. This provides a means for the RCD and the public to monitor progress, and the RCD is able to redirect efforts as necessary.

Per the requirements of Public Resource Code Division 9, the RCD has adopted a Long Range Plan that includes goals and an implementation plan through 2007. Division 9 requires that RCDs develop a strategic plan that identifies "all resource issues within the district for local, state, and federal resource conservation planning." The plan must cover a five-year period and include a framework for setting annual priorities (annual plans) as outlined in the long-range plan. In addition, the plan must also include a means for conveying ideas contained in the plan to the public and other public agencies. Lastly, the plan must include a basis for evaluating progress made toward goals and objectives outlined in the plan. The RCD's Long-Range Plan meets these requirements, ensuring that the RCD has established goals and remains focused on its core mission.

6. Shared Facilities

The Guadalupe-Coyote RCD shares facilities and programs to further its efforts and mission in northern Santa Clara County. The RCD has entered into an MOU with the USDA Natural Resource Conservation Service and utilizes the services of an NRCS District Conservationist. The RCD also has an MOU with the Loma Prieta RCD as well as MOU for Second Weed Management Plan with the NRCS, California Department of Agriculture, State Parks, SCVWD, SFPUC, UC Cooperative Extension and a variety of other agencies.

The existing soil study for Santa Clara County is outdated, having been prepared several decades ago. The RCD is assisting the NRCS in preparing a county-wide soil study which will be available for use by public and private interests.

7. Rate Restructuring

The Guadalupe-Coyote Resource Conservation District does not charge fees or service charges for its services, other than to cover direct costs for the technical education classes.

8. Government Structure Options

The Guadalupe-Coyote Resource Conservation District is providing programs and services for the benefit of the Guadalupe and Coyote and all other watersheds within the District, including the following: San Fransquito Creek, Matadero/Barron, Permanente, Stevens, Calabazas, San Tomas Aquino-Saratoga, Lower Penitencia, Upper Penitencia, and Upper Calaveras.

Two government structure options were identified for the Guadalupe-Coyote Resource Conservation District:

1. Maintain the status quo

This option would allow the Guadalupe-Coyote Resource Conservation District to continue providing programs without making any changes to its boundaries. The primary advantage to this option is program continuity as well as the potential for increased revenue through grants that are only available to RCDs and related agencies. The RCD is currently providing programs that are beneficial to the two watersheds and their residents. Because of the breadth of services RCDs are authorized to provide through their enabling legislation, there is no one agency that could offer all of the programs currently provided by the Guadalupe-Coyote RCD. The RCD is actively working for the benefit of both the Guadalupe and Coyote Watersheds, and has successfully pursued grant funding in order to leverage its resources. As an RCD, it is able to offer a broad range of conservation-related programs to residents and landowners within its boundaries. These types of programs typically generate strong interest by stakeholders who donate valuable volunteer time for the benefit of the region.

The disadvantage to this option is that there could be some duplication of services related to watershed stewardship. Although their enabling legislation is different (the SCVWD is based in comprehensive water resource management and flood control, the RCD is in soil conservation and a broad range of conservation issues), the programs and services offered by the RCD and the SCVWD's Watershed core business are complementary. Even though they are closely related, the SCVWD could not fully provide all the conservation services and programs the RCD is authorized to provide, i.e. the control of runoff and prevention of soil erosion in areas that would not impact the water courses within the County.

2. Dissolve the Guadalupe-Coyote Resource Conservation District and name the SCVWD as the successor agency

With this option the RCD would be dissolved and the SCVWD would be responsible for providing resource conservation programs within the RCD's former boundaries to the extent it is authorized per its enabling act. As the successor agency, the SCVWD would be entitled to the RCD's share of the 1% property tax. The advantages to this option include potential economies of scale, elimination of the potential for duplicate watershed-related services, the possibility of increased grant funding through the SCVWD's Watershed core business, and expanded public awareness of watershed issues through the SCVWD's existing public outreach programs. The RCD's boundaries are entirely within the boundaries of the SCVWD, and the SCVWD is authorized to provide programs that are related to comprehensive water management for all beneficial uses and protection from flooding.

The disadvantages include more restricted service levels, a possible reduction in volunteer support, the loss of some independent oversight on flood control projects, potential funding limitations under the federal Small Watershed Act, and a lack of certainty on how the property tax funding would be used. The SCVWD may not place the same priorities on programs as the RCD does, which could result in a change of services or programs. While the programs and services the SCVWD is authorized to provide are broad in scope, they must in some way relate to water resource management and flood protection. The RCD is not limited in this way and can provide programs that are related to a wide range of conservation issues. The current soil conservation services offered by the RCD would have to be provided directly through the Natural Resources Conservation Service or another entity (such as UC Cooperative Extension) as the SCVWD is not authorized to provide these unless they are related to water resource management or flood control. The federal Small Watershed Act (Public Law 566) requires that projects be in compliance with district conservation plans in order to receive funding. The SCVWD's Lower Silver Creek Flood Control Project received federal funding due to the RCD's involvement; it had previously been denied by the US Army Corps of Engineers and was later accepted after changes were incorporated to bring it into compliance with the RCD's conservation plan.

This may result in a reduction in the level of volunteer support currently occurring with the RCD's programs as volunteer opportunities are more limited with the SCVWD. Because of its goal for floodplain management, the RCD sometimes serves in a "watchdog" role, assessing the results of flood control projects to make sure they meet the stated levels of service and permit requirements.

With regards to use of the property tax funding, there is no guarantee or requirement that the property tax funding collected locally be used for local programs because the SCVWD is a county-wide district. Watershed management is a core business for the SCVWD and it receives a significant amount of funding, but there is no certainty that the locally collected property tax revenue will be used within the Guadalupe and Coyote Watersheds for conservation.

Some of the goals and programs of the RCD are similar in many respects to those of the SCVWD, and at the outset it may appear to be of obvious benefit to have the RCD reorganize with the SCVWD, tapping into the programs and resources of the larger agency to reach a broader base. However the success of watershed programs is integrally related to stakeholder involvement and volunteer support, and there is value in a smaller organization that allows direct stakeholder involvement in program implementation. Because of its size, community members are able to be directly involved in conservation and watershed issues and provide volunteer hours to carry out the RCD's action items. The volunteer opportunities for the SCVWD's watershed programs include participating in creek cleanups through the Creek Connections Action Group and following progress through the *Creekside Chronicle* newsletters. The RCD has been financially stable for a number of years and has the financial resources to carry out its programs at current or enhanced service levels. The SCVWD is currently experiencing financial constraints due to revenue reductions mandated by the State budget act of 2004, and it is expected that service levels for non-essential programs will be reduced for the next two years. A number of factors would need to be evaluated to determine if this option would provide sufficient benefit to the residents, including determining all of the tangible and intangible costs associated with a change.

9. Local Accountability and Governance

The Guadalupe-Coyote RCD is governed by a five member Board of Directors appointed by the County Board of Supervisors; one seat is currently vacant. The Directors serve staggered four-year terms, and new Directors are provided with an orientation. The current Board is as follows:

Board Member	Title	Term of Office	Compensation
Lawrence Johmann	President	2006	None
Carle Hylkema	Vice-President	2006	None
Edward Munyak	Director	2008	None
James Moore	Director	2008	None
Vacant			

The Board meets the first and third Monday of each month at 6:00 PM in the RCD's offices. The agenda is sent to the County; meeting notices are posted at the RCD's offices and sent to the SCVWD, NRCS and other interested parties. The GCRCD has recently established a new Web site to increase GCRCD outreach as well as public awareness of local conservation issues (www.gcrcd.org).

– DETERMINATIONS –

1) Population and Growth

The Guadalupe-Coyote Resource Conservation District serves the northern portion of Santa Clara County. The area is generally projected to have moderate growth rates, with the exception of the Coyote Valley area where a higher rate of growth is projected.

Land use within the RCD's service area includes both rural and urban; demand for resource conservation services is expected to increase as land use intensifies.

2) Infrastructure Needs and Deficiencies

The Guadalupe-Coyote Resource Conservation District does not own or maintain any infrastructure nor provide any water supply.

3) Financing Constraints and Opportunities

The Guadalupe-Coyote Resource Conservation District is funded through its share of the 1% property tax, supplemented by interest on reserves and grant funding.

The RCD has been successful in pursuing grant funding to further expand its programs and projects.

The RCD has maintained reserves at a level that is higher than necessary based on the services provided in the past; however reserves may be needed to fully implement the FY 2004-2005 budget.

4) Cost Avoidance Opportunities

The RCD is avoiding costs through the use of one fulltime staff and volunteers. The RCD's Associate Directors regularly perform volunteer work.

5) Management Efficiencies

The Guadalupe-Coyote Resource Conservation District achieves management efficiencies through the use of its Long-Range Plan and associated goals, objectives and action items. The Annual Report allows the Board of Directors and the public to monitor progress on goals and objectives.

6) Shared Facilities

The Guadalupe-Coyote Resource Conservation District participates in and conducts programs with other agencies, including the SCVWD, the USDA/NRCS, the Santa Clara Basin Watershed Management Initiative and other watershed-related entities in the County.

7) Rate Restructuring

The Guadalupe-Coyote Resource Conservation District does not charge fees for its services, other than registration fees to cover the cost of technical education classes.

8) Government Structure Options

The Guadalupe-Coyote Resource Conservation District is providing programs and services for the benefit of the Guadalupe and Coyote and all other watersheds within the District.

Two government structure options were identified:

- **Maintain the status quo:** The RCD would continue to provide programs with no changes to its boundaries.
  - *Advantage:* This option allows for continuity of service; no other agency could provide all of the programs offered by the RCD.
  - *Disadvantage:* There could be some duplication of services in the area of watershed stewardship between what is provided by the RCD and the Watershed core business of the SCVWD.
- **Dissolve the Guadalupe-Coyote RCD and name the SCVWD as the successor agency:** As the successor agency, the SCVWD would be responsible for implementing resource conservation programs within the RCD's former boundaries to the extent it is authorized to do so.
  - *Advantages*: This option offers potential economies of scale, elimination of the potential for duplicate watershed services, a possibility of increased grant funding through the SCVWD's Watershed core business, and expanded public awareness of watershed issues through the SCVWD's existing public outreach programs.
  - *Disadvantages:* This option could result in a narrower range of services or programs than what is currently being offered. The SCVWD is not legally established as a Resource Conservation District, and cannot provide the broad range of services that resource conservation districts can provide. This could also limit potential funding from some programs such as the federal Small Watershed Act (Public Law 566) which requires that projects be in compliance with district conservation plans in order to be eligible. Also, because the SCVWD is a county-wide district, there is no requirement or guarantee that the property tax funds collected locally would be spent only on local conservation programs.

9) Local Accountability and Governance

The Guadalupe-Coyote Resource Conservation District has a process for ensuring local accountability and governance. Board members are appointed by the County Board of Supervisors. The Board meets regularly and public noticed is provided through posting.

G. LOMA PRIETA RESOURCE CONSERVATION DISTRICT

Overview

The Loma Prieta Resource Conservation District (RCD) was formed in 1942 to provide soil conservation services for the southern portion of Santa Clara County and a portion of northern San Benito County. The RCD's boundary has changed over time such that it now only serves the area within Santa Clara County. The range of services has been expanded to include watershed-related programs in keeping with its authorizing legislation.

Resource Conservation Districts are authorized under Division 9 of the California Public Resources Code. The Loma Prieta RCD operates pursuant to Public Resources Code §9001 et seq. which states that the division is enacted for the following purpose:

> *(a)(2). To provide for the organization and operation of resource conservation districts for the purposes of soil and water conservation, the control of runoff, the prevention and control of soil erosion, erosion stabilization, including, but not limited to, these purposes in open areas, agricultural areas, urban development, wildlife areas, recreational developments, watershed management, the protection of water quality, and water reclamation, the development of storage and distribution of water, and the treatment of each acre of land according to its needs.*

The RCD's mission is to advise and assist individuals and public agencies in the prevention of soil erosion, runoff control, development and use of water, land use planning, conservation of wildlife and other related natural resources. This is accomplished by creating a public awareness of the continuing need for resource conservation through public information and education programs.

Programs and Services

The Loma Prieta RCD provides the following services:

- **Soil Conservation:** The RCD conducts educational programs for soil conservation and sponsors a contest for high school students.
- **Creek Stewardship:** The RCD is a partner in the Creek Connections Action Group along with the SCVWD and other entities. This group organizes two countywide creek cleanup efforts annually.
- **Rural Landowner Workshops:** Once a year the RCD offers a four-week series of workshops for rural landowners with small farms, small horse ranches, or vineyards. Topics include soil conservation, septic systems, fire-safe landscaping and other related subjects. The workshops have averaged approximately 40 to 50 attendees. The SCVWD provides initial information on the workshops to new landowners identified through the Tax Assessor's information, and then coordinates the registration process. The RCD is responsible for the meeting arrangements such as the location, refreshments, etc.

The District's boundary and Sphere of Influence are coterminous. A District map is shown on the following page.

Insert Loma Prieta RCD map

1. Growth and Population

The Loma Prieta RCD serves the southern portion of Santa Clara County. The RCD is bordered on the east, south and west by Stanislaus, Merced, San Benito and Santa Cruz Counties. The RCD's service area is primarily rural and unincorporated with the exception of the Cities of Gilroy and Morgan Hill. The RCD's original boundaries only included unincorporated lands outside the city limits of Gilroy and Morgan Hill, as well as lands that did not comprise the community of San Martin prior to July 13, 1942. The RCD's boundaries surrounding these areas have not been updated since the RCD's inception, and the areas that have been annexed by the two cities are still within Loma Prieta's service area.

Generally, population within this area is expected to increase significantly through 2020, concentrated within the Urban Service Area of each city. Although not as dramatic, the land use and population outside the two Urban Service Areas is changing as well. Economics and changing demographics have generated a trend from large agricultural enterprises to smaller operations, such as three to five acre farms, small horse ranches and vineyards. This trend has increased the need for conservation/water quality protection services as lack of landowner education can result in land use activities that are detrimental to the local environment. In response to this trend, the RCD's services are primarily focused on soil conservation, creek protection and water quality, and landowner education. The South County is entirely dependent on groundwater for its supply, which makes the protection of local surface water and natural recharge facilities more critical. Growth and population will continue to increase in South County resulting in greater environmental pressures and increased demand for these types of services.

2. Infrastructure Needs and Deficiencies

The Loma Prieta Resource Conservation District does not own or maintain any infrastructure, nor manage any water supply.

3. Financing Constraints and Opportunities

The Loma Prieta Resource Conservation District is funded by its share of the 1% property tax as well as interest income. Revenue and expenditures as reported to the State Controller are shown below:

Loma Prieta Resource Conservation District – Financial Summary				
		FY 1999-2000	**FY 2000-2001**	**FY 2001-2002**
Revenue -	Property Tax (1%)	$28,703	$32,185	$37,766
	Interest Income	2,251	2,837	2,369
	Intergovernmental – State	417	420	438
	Other Revenues	58	80	
	Total	$31,429	$35,522	$40,573
Expenses -	Salaries, Wages, Benefits	$9,107	$8,679	$9,520
	Services and Supplies	18,313	16,494	13,887
	Total	$27,420	$25,173	$23,407
Net Income		$4,009	$10,349	$17,166

The RCD was formed prior to the passage of Proposition 13. When it was created it received a dedicated share of property tax revenues from the properties within its boundaries. Subsequent to the passage of Proposition 13, the RCD now receives a dedicated share of the 1% property tax.

The basic financial records of the RCD are maintained by the office of the County Auditor-Controller. The RCD undergoes an independent audit every three years. The last audit noted was for June 2001. The RCD recently received notice that its former auditing firm will no longer be providing the service, and the RCD is actively looking for a new firm to complete its 2004 audit.

Historically the RCD's Board of Directors has taken a very conservative approach to its finances, such that the RCD now holds approximately $93,500 in reserves with the County Treasurer. The RCD has applied for a grant through the SCVWD and if awarded, $10,000 of the RCD's reserves will be used to fund the required match. The RCD's current Board of Directors has an interest in expanding the RCD's services by capitalizing on the RCD's financial resources. The RCD has a newly appointed treasurer who is evaluating the RCD's financial condition and will be making recommendations to the Board.

Loma Prieta does not have any substantial capital assets and, based on the type of services provided, would not necessarily require a high level of reserves to fund a capital acquisition or major capital improvement project. The RCD could address reserve levels through District policy, which should have some relationship to the RCD's adopted Long Range Plan and the activities it plans to accomplish. With the increasing financial constraints faced by public agencies that provide essential public services, it is incumbent upon special districts with property tax revenue to demonstrate good stewardship of this financial resource.

Per the State budget act of 2004, the Loma Prieta Resource Conservation District will be required to contribute to the Educational Revenue Augmentation Fund in both FY 2004-2005 and 2005-2006. The County Auditor-Controller will reduce the RCD's annual tax increment by the required contribution amount. Loma Prieta's estimated contribution is $3,769 for FY 2004-2005. Given the RCD's financial history, it should be able to accommodate this reduction in revenue with little impact to the programs and services it provides.

4. Cost Avoidance Opportunities

The Loma Prieta Resource Conservation District controls costs by operating with limited overhead. The RCD has one part-time staff and uses volunteer support where appropriate. The RCD is avoiding election costs by having the County Board of Supervisors appoint the RCD's Directors.

There are a number of conservation-related resources available to the RCD to use in delivering its programs. The US Department of Agriculture's Natural Resources Conservation Service has offices in Hollister and Salinas. At one point, Loma Prieta had an NRCS staff member on site but that position was

eliminated due to federal budget cuts. The RCD may also leverage the expertise of the University of California Cooperative Extension Program and the Santa Clara County Farm Bureau. In addition, the State Department of Conservation also provides programs and information to support and enhance the RCD's services.

The RCD's annual landowner workshops are delivered through a coordinated effort with the SCVWD. The SCVWD identifies potential participants through tax assessor information and coordinates the registration process. The RCD is responsible for the meeting place arrangements and the speakers.

5. Management Efficiencies

The Loma Prieta Resource Conservation District is managed by one part-time staff member under the direction of the RCD's Board. The RCD has a five-member voting board supplemented by two non-voting associate board members. The two associates provide a pool of trained Directors when terms expire, ensuring a smooth transition when new Directors are seated.

The California Conservation Partnership and California Department of Conservation have published *The Resource Conservation District Guidebook: A Guide to District Operations and Management* (1999). This guide is available for the RCD's use.

Per the requirements of Public Resource Code Division 9, the RCD has prepared a Long Range Plan that includes goals and an implementation plan through 2007. Division 9 requires that RCDs develop a strategic plan that identifies "all resource issues within the district for local, state, and federal resource conservation planning." The plan must cover a five-year period and include a framework for setting annual priorities (annual plans) as outlined in the long-range plan. In addition, the plan must also include a means for conveying ideas contained in the plan to the public and other public agencies. Lastly, the plan must include a basis for evaluating progress made toward goals and objectives outlined in the plan. The Plan provides structure and guidance for the RCD's activities and tasks, providing a means to evaluate results.

6. Shared Facilities

Loma Prieta regularly shares facilities and programs to maximize its outreach and education efforts. The RCD has entered into MOUs with the Department of Conservation, the Central Coast Resource Conservation and Development Association and the USDA/NRCS.

7. Rate Restructuring

The Loma Prieta Resource Conservation District does not charge fees or service charges for its services, other than a nominal registration fee for the workshops. Revenue has been adequate to meet budgeted expenses, and reserve levels have steadily increased.

8. Government Structure Options

Three government structure options were identified for the Loma Prieta Resource Conservation District:

1. Maintain the status quo

This option would allow the Loma Prieta RCD to continue providing programs without making any changes to its boundaries. There are several advantages to this approach, including continuity of service. The RCD is providing a service that residents find valuable in the annual landowner workshops. As an RCD, it is able to offer a broad range of conservation-related programs to residents and landowners within its boundaries; there is no other agency that could provide all of the same programs. The RCD is also providing community involvement and educational opportunities that increase environmental awareness and promote better land stewardship, both important to the long-term protection of water resources. Lastly, the area has a long agricultural history and a number of the landowners have a strong affinity to the RCD and the soil conservation service it has provided over the years.

The disadvantage to this option is that there could be some duplication of services related to watershed stewardship. Although their enabling legislation is different (the SCVWD is based in comprehensive water resource management and flood control, the RCD is in soil conservation and a broad range of conservation issues), the programs and services offered by the RCD and the SCVWD's Watershed core business are complementary. Even though they are closely related, the SCVWD could not fully provide all the conservation services and programs the RCD is authorized to provide, i.e. the control of runoff and prevention of soil erosion in areas that would not impact the water courses within the County.

2. Dissolve the Loma Prieta Resource Conservation District and name the SCVWD as the successor agency

With this option the RCD would be dissolved and the SCVWD would be responsible for providing resource conservation programs to the extent it is authorized in its enabling act. As the successor agency, the SCVWD would be entitled to the RCD's share of the 1% property tax. The advantages to this option include potential economies of scale, elimination of duplicate services, a possibility of increased grant funding through the SCVWD's Watershed core business, and expanded public awareness of watershed issues through the SCVWD's existing public outreach programs. The RCD's boundaries are entirely within the boundaries of the SCVWD, and the SCVWD is authorized to provide programs that are related to comprehensive water management for all beneficial uses and protection from flooding.

The disadvantages to this option are a narrower range of services available to residents, potential funding limitations under the federal Small Watershed Act, and a lack of certainty in how the property tax funding would be used. The SCVWD may not place the same priorities on programs as the RCD does, which could result in a change of services or programs. While the programs and services the SCVWD is authorized to provide are broad in scope, they must in some way relate to water resource management and flood protection. The RCD is not limited in this way and can provide programs that are related to a wide range of conservation issues. The current soil conservation services offered by the RCD would have to be

provided directly through the Natural Resources Conservation Service or another entity (such as UC Cooperative Extension) as the SCVWD is not authorized to provide these unless they are related to water resource management or flood control. The federal Small Watershed Act (Public Law 566) requires that projects be in compliance with district conservation plans in order to be eligible.

Equally important is consideration for how the property tax funding could be used in the future. Watershed management is a core business for the SCVWD and receives a significant amount of funding; however the SCVWD is a county-wide district and there is no requirement that the property tax funding collected locally within the Loma Prieta RCD service area be used for local programs.

The RCD has been financially stable for a number of years and has the financial resources to carry out its programs at current or enhanced service levels. The SCVWD is currently experiencing financial constraints due to revenue reductions mandated by the State budget act of 2004, and it is expected that service levels for non-essential programs will be reduced for the next two years. A number of factors would need to be evaluated to determine if this option would provide sufficient benefit to the residents, including determining all of the tangible and intangible costs associated with a change.

3. Detach annexed areas from the Loma Prieta Resource Conservation District

The option would involve making boundary adjustments in the Gilroy and Morgan Hill areas. When the Loma Prieta Resource Conservation District was originally formed, it was intended to provide soil and water conservation services to rural areas outside the cities and the San Martin area. There were no subsequent boundary updates and areas that have been annexed by the cities are still within the RCD's boundaries. This option would restore the RCD's boundaries to the original intent by removing any areas annexed to the Cities of Gilroy or Morgan Hill. The RCD's share of the 1% property tax for the detached areas would be reallocated to each taxing jurisdiction within that Tax Rate Area. The primary advantage includes increased public benefit from the property tax funding in those areas as the funding is reallocated to other public services. The RCD was formed to serve rural areas and its core programs provide greater benefit to those areas over more developed areas. Based on the RCD's existing programs, the drop in service levels within the annexed areas would be minimal and could be addressed through the programs the SCVWD is currently providing. (City residents could still participate in RCD sponsored programs, perhaps for an additional fee or some other compensating rate.)

There are several disadvantages to this option. First, residents within the cities may place a high value on the services provided by the RCD and there may be a potential lack of community support for any change. Second, the RCD's goals and action plan may change after the Board of Directors completes its review of the RCD's financial condition. Removing these areas may limit the scope and scale of programs that could be provided in the future. Third, the RCD's operating revenue would be reduced per the amount and valuation of the detached areas. (This would be marginally offset by the additional property tax revenue to be gained from the Pacheco Flats area which was recently identified as being in the RCD's boundaries.)

9. Local Accountability and Governance

Loma Prieta is governed by a five-member Board of Directors appointed by the County Board of Supervisors. The Directors serve staggered four-year terms, and new Directors are provided with an orientation. The current board is as follows:

Board Member	Title	Term of Office	Compensation
Emily Baird	Chairperson	2008	None
Kris Maas	Director	2006	None
Steven Malech	Director	2008	None
Jeannette Dickens	Director	2006	None
David Ball	Treasurer	2008	None

The Board meets the third Tuesday of each month at 4:30 PM. Meeting notices are posted in the RCD's offices. The RCD does not have a website.

Historically the RCD conservatively managed its financial resources, which may not have maximized the benefit to the taxpayers. The RCD's Board is discussing new strategies and an approach to fully utilize property tax funding in the future.

– DETERMINATIONS –

1) Population and Growth

The Loma Prieta Resource Conservation District currently serves the southern portion of the County. This area is projected to have modest growth in the future, which will be concentrated within the Urban Service Areas of the two cities.

Land use outside the Urban Service Areas is gradually changing from large agricultural operations to smaller farms, vineyards and small ranches. The need for landowner services will increase in order to maintain environmental quality and adequate soil/water conservation.

2) Infrastructure Needs and Deficiencies

The Loma Prieta Resource Conservation District does not own or maintain any infrastructure or provide any water supply.

3) Financing Constraints and Opportunities

The Loma Prieta Resource Conservation District is funded through its share of the 1% property tax, supplemented by interest on reserves.

The RCD has increased its reserves annually for each of the three years reported. In FY 2001-2002 the RCD only expended 58% of its operating revenue for the year.

The RCD has accumulated reserves that are higher than necessary for the current levels of service.

4) Cost Avoidance Opportunities

The RCD is avoiding costs through the use of part-time staff.

5) Management Efficiencies

The Loma Prieta Resource Conservation District has management tools available to assist in operations, such as the *Resource Conservation District Guidebook*.

The RCD has a five year Long-Range Plan that provides a framework and direction for RCD actions.

6) Shared Facilities

The Loma Prieta Resource Conservation District shares facilities with other agencies, including the SCVWD, the California Department of Conservation, and the USDA/NRCS.

7) Rate Restructuring

The Loma Prieta Resource Conservation District does not charge fees for its services, other than a registration fee for workshops.

8) Government Structure Options

The Loma Prieta Resource Conservation District is providing conservation-related programs in the southern portion of Santa Clara County. Three government structure options were identified:

- **Maintain the status quo:** The RCD would continue to provide programs with no changes to its boundaries.
  - *Advantage*: This option allows for continuity of service; no other agency could provide all of the services the RCD is authorized to provide.
  - *Disadvantage*: There could be some duplication of services in the area of watershed stewardship between what is provided by the RCD and the Watershed core business of the SCVWD.
- **Dissolve the Loma Prieta Resource Conservation District and name the SCVWD as the successor agency:** As the successor agency, the SCVWD would be responsible for implementing resource conservation programs within the RCD's former boundaries to the extent it is authorized by its enabling act.
  - *Advantages*: This option offers potential economies of scale, elimination of duplicate services, a possibility of increased grant funding through the SCVWD's Watershed core business, and expanded public awareness of watershed issues through the SCVWD's existing public outreach programs.

- *Disadvantages:* This option could result in a narrower range of services or programs than what is being offered. The SCVWD is not legally established as a Resource Conservation District, and cannot provide the broad services that resource conservation districts can provide. This could limit potential funding as the federal Small Watershed Act (Public Law 566) requires that projects be in compliance with district conservation plans in order to be eligible. Also, because the SCVWD is a county-wide district there is no requirement or guarantee that the property tax funds collected locally would be spent only on local conservation programs.

- **Detach annexed areas from the RCD:** The RCD's boundaries would be adjusted to exclude any areas annexed by the Cities of Gilroy and Morgan Hill.
  - *Advantages*: This option would potentially increase the public benefit derived from the 1% property tax collected from the annexed areas. The RCD was originally formed to serve rural areas and its core programs provide greater benefit to rural rather than more developed areas.
  - *Disadvantages:* This option could result in lower service levels and reduced conservation program funding for the annexed areas. It could potentially limit the scope and scale of future RCD programs as they would not be made available within the two cities. The RCD's operating revenue would be reduced by the amount of the RCD's share of the 1% property tax assessed within the detached areas.

9) Local Accountability and Governance

The Loma Prieta Resource Conservation District has a process for ensuring local accountability and governance. Board members are appointed by the County Board of Supervisors. The Board meets regularly and meeting notices are posted in a public location.

3. CITY WATER AGENCIES

City of Gilroy

City of Milpitas

City of Morgan Hill

City of Mountain View

City of Palo Alto

San Jose Municipal Water System

City of Santa Clara

City of Sunnyvale

A. CITY OF GILROY

Overview

The City of Gilroy, located in the southern most portion of Santa Clara County, encompasses 14.65 square miles and provides water services to approximately 46,000 residents. The water utility is managed by the Operations Division of the City's Community Services Department. Gilroy's only source of water is groundwater, making groundwater quality a critical issue. Moderate growth is projected for the South County, including Gilroy. The City recently completed its Water System Master Plan to ensure that system reliability and capacity is in keeping with the projected growth.

1. Growth and Population

The City of Gilroy has three planning boundaries: the city limits of the incorporated area, the Urban Service Area, and a 20-year planning boundary. The City's sphere of influence extends from Fitzgerald Avenue/Masten Avenue south to the San Benito County border. The City considered growth and population projections in its 2020 General Plan, estimating a population of 60,500 to 62,500 in 2020. In October 2003, the 2020 projection was revised to 65,082. A higher rate of growth is projected up until 2010 with an incremental increase of 1,100 additional residents per year. Growth from 2010 through 2020 is projected to be somewhat slower with an increase of only 800-1,000 new residents per year. This yields an average annual growth rate of 2.8% through 2020. ABAG's 2005 projections estimate Gilroy's population at 53,500 in 2005, reaching 66,400 by 2030. The estimated build-out population based on land use designations in the General Plan is 82,136.

The City currently provides water service to the following connection types:

Connection Type	Count	Percent of Total
Residential	10,324	89.33%
Manufacturing/Industrial/Commercial	837	7.24%
Irrigation/Agriculture	392	3.39%
Recycled	3	.03%
Total	11,556	100%

The City has developed a vision for the character and quality of Gilroy which provides guidance and direction for the General Plan's goals, policies and implementing actions. The vision identifies desirable city attributes which include the following that relate to growth, development and the provision of water service:

- Small town character
- Rural setting, surrounded by open space
- Compact, integrated development pattern; and
- Link between growth and resources.

Two primary principles of Gilroy's 2020 General Plan include managing growth and minimizing cost. Growth is managed through the use of the 20-year growth boundary, Urban Service Area boundary, Residential Development Ordinance, and policies that coordinate development approvals with infrastructure extensions and service provision. Costs are minimized by directing growth to areas that will be less expensive to serve and where potential impacts can be reduced.

The amount of undeveloped land within a jurisdiction also serves as an indicator of potential growth. Gilroy's 2020 General Plan noted the following inventory of undeveloped land in 1999: Residential 26%, Commercial 29%, and Industrial 74%. Land uses of developable land also indicate the potential for increased water demand, particularly in the industrial sector. Depending on the industry type and processes, industrial water demand can be significantly greater than residential or commercial demand. Industrial demand can be met with recycled water in some cases. Some areas in California have made major inroads in replacing potable water with recycled water specially treated to industry standards. However, in Gilroy the majority of the developable vacant land is east of Highway 101 on the opposite side of the freeway from the wastewater treatment plant. Extending service into the area would require a major infrastructure investment and may not be cost effective under current conditions.

In 2002 Gilroy expanded its 20-year boundary to include 660 acres of agricultural land. If development were to occur, the total water demand for Gilroy would increase significantly, requiring greater levels of groundwater recharge in the area.

Growth will continue to be a significant issue for Gilroy, both in terms of planning for infrastructure and the resultant increase in water demand. The County's planning and development approvals within the adjacent San Martin area inherently affect Gilroy for groundwater impacts. Gilroy's groundwater flows southward from Morgan Hill and San Martin, and the continued use of septic systems outside the two Urban Service Areas increases the risk of nitrate levels exceeding acceptable limits in Gilroy. The cost for more intensive water treatment processes to mitigate lower water quality will ultimately be borne by the rate payers. As the South County area increases in population, jurisdictions with more employment opportunities will see increased demand within commercial and industrial areas. The South County Joint Area Plan establishes the framework for planning coordination between the three jurisdictions (Morgan Hill, Gilroy and the County). Continued collaboration and coordination among the water purveyors in South County will benefit the Gilroy community.

The City has addressed the impact on water service from growth and the projected increase in population in its 2020 General Plan, 2004 Water Master Plan and 2000 Urban Water Management Plan.

2. Infrastructure Needs and Deficiencies

Gilroy's water system is comprised of the following:

Facility	Quantity
Pipelines	120 miles
Reservoirs (Tanks)	11
Total Water Storage Volume	14.07 MG
Pump Stations	6 (booster)
Wells	8
Total Well Pumping Capacity	15.47 MGD
Pressure Zones	3

Gilroy has adopted infrastructure standards that are more costly to construct but have a longer usable life and reduced maintenance and repair costs. In particular, the Gilroy distribution system is constructed with cast iron pipe and the storage reservoirs are all steel or concrete. The oldest reservoir was built in 1969.

The City adopted its Water Master Plan in May 2004. The Plan provides for system improvements based on projected growth and increased demand, using the build-out conditions of the 2020 General Plan. The, the Master Plan includes recommendations in several areas, and implementation is planned to coincide with development and capacity needs.

- Distribution System: new or increased capacity pipelines to extend service to areas of new development
- Supply Capacity: construction of 8 new wells to meet increased demand in 2005 equal to a total of 22.8 MGD
- Storage Capacity: additional storage capacity of 5.3 MG for Pressure Zone 1 and 0.71 MG storage reservoir for Pressure Zone 2 South
- Mesa Ridge Water System: new pipelines and infrastructure that would be required to serve a proposed development
- Fire Flow Improvements for Downtown Commercial Area: pipeline replacement to provide adequate capacity for fire flow.

The Master Plan includes a recommended Capital Improvement Program based on the findings and recommendations.

The City noted several infrastructure improvements that are either planned or in the process of being implemented. These include four new wells to be constructed over the next few years: two in 2005, one in 2006 and one in 2009. The City is also adding two new storage reservoirs at 0.710 MG each. The budget includes funding for improvements to 9,188 feet of pipeline.

The City has budgeted for capital improvements through FY 2023. One significant annual budget item is for meters; this expenditure is budgeted at $300,000 per year through the 2010 and $100,000 per year through 2023. For FY 2004-2005, the City has budgeted $683,612 for capital improvements to the water system and $5.6 million for water development projects such as wells and the sports park water main extension.

It was noted in the Water Master Plan that there is insufficient fire flow in the downtown area during peak demand conditions. Recommendations include replacing 7,300 feet of existing 4" pipe with 6, 8 and 10" mains. The City will be addressing the upgrades through its maintenance and replacement budget rather than the CIP.

Water Demand

Existing and build-out water demands within Gilroy are as follows:

Demand	Quantity
Existing Average Day Demand	7.44 MGD
Existing Maximum Day Demand*	17.1 MGD
Existing Peak Demand	13.7 MGD
Build-Out Average Day Demand	14.8 MGD
Build-Out Maximum Day Demand	34.0 MGD*

** Based on current max day peaking factor of 2.3*

Per the City's 2000 Urban Water Management Plan, Gilroy has experienced a range of per capita consumption rates in the past. This is expressed as "gallons per capita per day" (GPCD). The high was 205 GPCD in 1984 and the low was 143 GPCD in 1991. The City currently uses a rate of 180 GPCD for its planning. Using an estimated household size of 3.46 persons per ABAG projections, the daily demand per residential unit is 622.8 gallons.

Water Supply

Gilroy's current water supply is as follows:

Supply	Current Volume	Maximum Available (Contractual)	Percent of Total
Groundwater Wells	17,362 AF	NA	100%
Total	17,362 AF	NA	100%

Gilroy overlies the Llagas Sub-basin and shares this groundwater resource with the other water providers in the South County. Groundwater is the sole source of domestic supply as the City has no interconnections to other systems. Gilroy operates eight wells on the valley floor, treating the water at the wellhead prior to distribution. Groundwater recharge is performed by the SCVWD, and the City pays a

pump tax to cover its share of those costs. Gilroy is actively pursuing overdraft reduction through the use of Demand Management Measures and water recycling.

There is no groundwater flow model for the South County. However, State Department of Water Resources maps dated 1914 and 1974 indicate a south-southeasterly direction of groundwater flow under the City of Gilroy. The water elevation map prepared by the SCVWD in 2001 indicated a southeasterly direction of flow as well. This has implications for the groundwater quality within Gilroy, particularly with the continuing use of septic systems in the San Martin area and previous manufacturing land use. Septic systems and agriculture are known to increase nitrate levels in groundwater. The highest incidence of nitrates in Gilroy is in Well No. 8 with a Maximum Contaminant Level (MCL) of 36 mg/L, still below the threshold of 45 mg/L for drinking water. However, if land use intensifies in the San Martin area, there is a concern that the nitrate levels will rise.

Perchlorate contamination from previous manufacturing operations further north has been identified in the northeastern outskirts of the City, east of Highway 101. The City is actively participating in the Perchlorate Working Group, along with the SCVWD, Morgan Hill and the County, to restore groundwater quality in the most expedient, cost-effective manner. The group is also pursuing cost recovery to ensure that the financial burden for treatment does not rest on the water utility agencies.

Recycled water is available in the northern portion of Gilroy. The water is treated to a tertiary level at the South County Regional Wastewater Authority (SCRWA) facility in northern Gilroy. The SCVWD owns the distribution system. The plant has the capacity to treat up to 3 MGD. Water is distributed to five irrigation customers with a combined usage of 700 acre feet per year. Gilroy noted in its 2000 Urban Water Management Plan that it expects demand to increase to 11 MGD by 2020. The SCRWA is in the process of upgrading its treatment capacity to 9 MGD.

Water Storage

Current water storage capacity is 14.07 MG, which can supply up to 1.6 days of average daily demand. The City is in the process of adding an additional 1.42 MG capacity. The 2004 Water Master Plan includes recommendations, based on build-out conditions, to add an additional 5.3 MG of storage for Pressure Zone 1 and 0.71 MG storage for Pressure Zone 2 South for higher emergency storage for Zones 1 and 2.

Summary

Gilroy relies on groundwater extracted from the Llagas Sub-Basin; there is no other source of supply. The City extracted 8,333 acre feet in 2004. Groundwater quality is a growing concern as the groundwater flows in a south-southeasterly direction under the City and can transfer contaminants generated in areas to the north. The City is actively working to protect groundwater resources through the Perchlorate Working Group. The City has addressed its infrastructure needs through its 2004 Water Master Plan, Capital Improvements Program, and 2000 Urban Water Management Plan.

3. Financing Constraints and Opportunities

The City of Gilroy operates its water utility as an enterprise activity, financing it through the Water Fund. Capital improvements are financed through the Capital Improvement Budget. The following table summarizes the financial activity in the Water Fund for FY 2002-2003:

City of Gilroy – Water Fund FY 2002-2003 Financial Summary			
Revenue -	Water Revenues	$4,586,060	94.51%
	Interest	$215,927	4.45%
	Other Income/Adjustments	$50,282	1.04%
	Total	$4,852,269	100.00%
Expenses -	Operations	$3,155,124	67.90%
	Water Purchases*	0	0%
	Admin/Management	$1,491,480	32.09%
	Dep./Ins./Transfers/Other	0	0%
	Total	$4,646,604	100.00%
Reserves		0	

** SCVWD pump tax*

Gilroy uses a rolling five-year financial plan that is updated annually to budget for its services. This gives the City a long term perspective in planning for services, including water. The City noted in the introduction to its 2004-2009 Financial Plan that they are projecting increasing financial constraints due to a number of factors, including the slow-down in the regional economy and exponential increases in employee benefit costs. However, the primary reason is the impact caused by the State's reallocation of local revenues.

The State's budget act of 2004 significantly changed how local revenues are allocated. Cities within California will be required to contribute to the State's General Fund in both FYs 2004-2005 and 2005-2006. Gilroy's estimated contribution in the first year is approximately $612,827. Although the water utility is an enterprise activity and revenues are expected to cover all costs, the impact of this reduction in revenue will likely be felt across all affected city departments, including Community Services.

The City designates reserves for both operations and depreciation/capital replacement. It was noted in the introduction to the Financial Plan that the operating reserves of the Water Fund had been virtually depleted due to cost increases that could not be absorbed through rate increases. The depreciation reserves were approximately $5.9 million in FY 2003-2004. 5.5% of the Capital Improvements Budget is allocated to water projects for the five year period covering 2002-2007.

The City of Gilroy has used bonds in the past to finance major infrastructure projects; none of the current bonds are related to the water system. The City has an AAA credit rating from all of the major credit raters. The City was audited by an independent auditor in June 2003, and the results were not qualified.

4. Cost Avoidance Opportunities

The City is actively pursuing cost avoidance opportunities for various aspects of the water delivery process. For example, it was noted in the introduction to the 2004-2009 Financial Plan that the City had made significant progress in its efforts to lower electricity costs related to water pumping. The City has been able to take advantage of off-peak electricity rates due to the new reservoir coming on line.

Gilroy's 2004 Water Master Plan serves as a significant cost avoidance measure. The Plan includes recommendations for system improvements that will allow the City to implement the projects in a timeframe that coincides with projected increases in demand. It also includes recommendations that will allow the City to avoid costly repairs in the future. The Plan includes analysis on the extent to which projects will benefit existing development or new development, which will enable the City to charge the appropriate fees when service is extended to new developments.

Reducing potable demand is an effective cost-avoidance measure, and the City has a comprehensive conservation program in place.

The Community Services Department utilizes the services of other City departments such as finance, communications, legal, and planning to improve cost efficiency for the water utility.

5. Management Efficiencies

Gilroy manages the water utility with the following staff:

Staff Type	Number FTE's
Management/Administrative	1
Operational	9
Professional/Support	8
Total	18

The City adopted its Water Master Plan in 2004 and Urban Water Management Plan in 2000. The Urban Water Management Plan will be updated in 2005 in accordance with the State's requirements. The Capital Improvements Plan and budget is projected out to 2023 and reviewed annually as part of the budget process.

The City is achieving management efficiencies through its service model and a high degree of coordinated planning with other City departments.

6. Shared Facilities

The City of Gilroy shares facilities with other agencies where appropriate in order to reduce costs and improve efficiencies. Gilroy is one of the three jurisdictions participating in the South County Joint Area Plan, a component of the County's General Plan. The Plan provides the framework for a coordinated planning effort in the South County.

Gilroy is actively involved in the Perchlorate Working Group, a partnership of the SCVWD, the cities of Morgan Hill and Gilroy, and the County. The Group's efforts are directed toward promptly and cost-effectively restoring groundwater quality in the South County.

As one of the SCVWD's water retailers, Gilroy partners with the District on water conservation programs. In addition, the SCVWD manages the groundwater recharge program and facilities for the benefit of Gilroy and other South County providers.

7. Rate Restructuring

Supply Rates

Water supply costs are an ongoing concern for the City. The City pays a pump tax to the SCVWD in exchange for groundwater recharge services. It was noted in the introduction to the City's 2004-2009 Financial Plan that it would be impossible for Gilroy's rates to keep pace with the rate increases instituted by SCVWD. The City is currently paying the following pump tax rate:

SCVWD: Groundwater = $200/AF

Gilroy is expecting the pump tax rate to continue to increase significantly over time, which will result in rate increases for its water customers. The City has depleted reserves that could be used for rate stabilization and will be forced to pass on the entire increase to its customers in the future. The City sees the rate issue as one of its most significant challenges in the next few years.

Demand Rates

Gilroy uses a multi-tiered rate structure to promote water conservation. Account types include residential, seniors, commercial/industrial, and irrigation. Accounts within the two hillside pressure zones pay a higher rate to cover the increased cost for pumping; this price differential was implemented on July 1, 2004. Customers pay a meter charge as well as a usage charge.

The rate tiers are based on 1,000 gallon units of measurement. The first tier is through 5,000 gallons per month; the second is through 15,000, and the third is through 30,000. The fourth tier is anything above 30,000. Irrigation-only customers have two tiers (less than and over 30,000 gallons); they pay the same rates as residential users at those tiers.

For purposes of comparison, this report uses the rates for a standard residential customer using a ¾" meter and 500 gallons a day, or 20 CCF (14,961 gallons) per month. The monthly bill for a Gilroy customer would be $22.28 (5 @ $0.71 + 10 @ $1.39 + $4.83 meter charge = $22.28).

Water service to connections outside the City's boundaries is charged at twice the normal rate. The City noted that there are four accounts in this category: one domestic, two manufacturing/industrial, and one irrigation.

The City uses a rolling five-year rate analysis to determine required rate increases on an annual basis. Rates have increased approximately 24% over the past three fiscal years, primarily due to the increased pump tax and increased electricity costs. Annual rate increases are projected for the foreseeable future.

8. Government Structure Options

The City of Gilroy operates its water utility through the Operations Division of the Community Services Department. Other City departments provide related services, such as finance, legal, planning and fire.

The City's Urban Service Area is not coterminous with the boundaries of its incorporated area. There are portions of incorporated area that are not served by the City's water system as well as unincorporated areas that are. The City noted that it serves four accounts outside the City's boundaries. The law requiring out-of-agency agreements and approval by LAFCo was enacted in 1994; services existing prior to 1994 do not require LAFCo review and approval. Santa Clara LAFCo has approved two of these agreements for Gilroy, one in 1997 and another in 2000.

There are no other retail public water agencies in the area. No other government structure options were noted.

9. Local Accountability and Governance

Gilroy provides some information related to its water service and conservation on the City's website (www.ci.gilroy.ca.us). The City's annual 2003 Water Quality Report is available to the public on the City's web page and in the Community Services Department.

Gilroy has a seven-member City Council. The water utility is addressed by the Council during regular meetings. Council members are elected at large to serve staggered four-year terms. The Council meets the third Monday of each month at 7:00 PM. Meeting notices are posted in the City's offices as well as on the website.

The City has protocols and procedures in place to ensure that standards for local accountability and governance are met, including public notice of council meetings and actions as well as water service information.

– DETERMINATIONS –

1) Population and Growth

Gilroy had an estimated population of 45,000 in 2003. The City projects its annual growth rate to be 2.8% to reach a population of 65,082 in 2020. ABAG estimated Gilroy's population at 53,500 in 2005 with an annual growth rate of 1% to reach 66,400 by 2030.

The City has planned for growth and development through its 2020 General Plan, 2004 Water Master Plan and 2000 Urban Water Management Plan.

2) Infrastructure Needs and Deficiencies

Gilroy relies on groundwater extracted from the Llagas Sub-basin through eight wells in the valley floor.

Groundwater quality is a concern as groundwater flows from the north in a south-southeasterly direction under the City. Perchlorate contamination has been identified at the northeastern edge of the City.

The City plans for infrastructure needs through its 2004 Water Master Plan and CIP program. For FY 2004-2005, the CIP has budgeted $683,612 for water system projects and $5.6 million for water development projects.

3) Financing Constraints and Opportunities

Gilroy operates its water utility as an enterprise activity such that revenues are expected to cover all costs related to water service.

The City maintains reserves for operations and depreciation; the operating reserves have been depleted due to cost increases that could not be covered through rate increases.

The City uses a 5-year rolling Financial Plan, which provides the benefits of long-term financial planning.

The City is facing increasing financial constraints due to cost increases and State budget impacts that may affect the water utility.

4) Cost Avoidance Opportunities

Gilroy actively pursues cost avoidance measures related to water service, such as lowering electricity costs related to water pumping by taking advantage of off-peak rates.

The City's 2004 Water Master Plan provides recommendations and benefit analysis to ensure the timely implementation of system improvements and appropriate cost allocations.

5) Management Efficiencies

Gilroy is achieving management efficiencies for its water utility through its service model and planning efforts. The 2004 Water Master Plan will provide significant benefits in terms of planning for future improvements and capitalizing on opportunities to maximize efficiency.

6) Shared Facilities

Gilroy shares facilities with other agencies where appropriate to benefit its water utility service, such as groundwater recharge and conservation programs provided by the SCVWD and recycled water produced at the SCRWA facility.

The City is an active participant in the Perchlorate Working Group whose focus is to restore groundwater quality in South County.

7) Rate Restructuring

Gilroy uses a tiered rate structure to promote water conservation. The rate structure includes incremental rate increases for customers in the hillside pressure zones to cover increased pumping costs.

The City adjusts its water utility rates annually based on budget projections.

The expected increase in the pump tax imposed by the SCVWD represents a significant challenge to the City in their ability to moderate future rate increases.

8) Government Structure Options

Gilroy's water utility is operated by the Community Services Department. Other departments within the City are used to accomplish such tasks as finance, planning, fire protection, and information technology for system operations. No other government structure options were noted.

9) Local Accountability and Governance

The City of Gilroy ensures that local accountability and governance standards are met through the oversight provided by the City Council. The water utility is addressed during City Council meetings and information is available to the public through the City's website and in printed form.

B. CITY OF MILPITAS

Overview

The City of Milpitas is located in the northeastern portion of Santa Clara County adjacent to Alameda County. The City was incorporated in 1954 and originally relied on imported water from SFPUC for its potable supply. In 1993, the City began purchasing treated water from the SCVWD primarily for use in commercial and industrial areas. The water system is managed by the City of Milpitas Public Works Department. Currently, the Department provides water to 64,000 residents with a water service area that encompasses 13.6 square miles. The City is a member agency of BAWSCA.

1. Growth and Population

The City of Milpitas has an estimated population of 64,000 residents. The City's General Plan projects a population at build-out in 2020 of 76,406 based on current land use designations, which represents a 19% increase. According to its Urban Water Management Plan, the City has grown at an average annual rate of 3.8% in the last 20 years, which is significantly higher than the region's average growth rate. ABAG's 2005 projections estimate Milpitas population at 65,500 in 2005 with an annual growth rate of 1.6% to reach 91,400 in 2030. The General Plan was updated in 2002 to incorporate the Midtown Specific Plan, and included the addition of several new land use categories with increased density. In 2002, projections on citywide land availability included 3,747 acres and 88 potential units in the hillside area and 4,370 acres and 974 potential dwelling units in the valley. Water demand is expected to increase consistent with population growth. The City currently provides service to the following connection types:

Connection Type	Count	Percent of Total
Residential	13,773	91%
Manufacturing/Industrial/Commercial	970	6%
Recycled	135	1%
Irrigation	320	2%
Total	15,198	100%

The City of Milpitas is divided into two distinct geographic areas: valley floor and hillside.
The predominant land use within the City is residential. It should be noted that the valley floor within Milpitas' incorporated boundaries is almost fully urbanized. The adoption of the Midtown Specific Plan and its related changes in residential density reflect the City's intention to guide future development within the City's core. Given the rapid growth throughout the region, it is expected that future development would occur within city boundaries through redevelopment and changes in land use.

The City has addressed the projected increase in population and impact on water service through its General Plan and Urban Water Management Plan.

2. Infrastructure Needs and Deficiencies

Milpitas completed its Water Master Plan in 2002, which addresses the present and future water system infrastructure needs based on projected demand. The City's water system infrastructure is comprised of the following:

Facility	Quantity
Pipelines	198 miles
Reservoirs (Tanks)	5
Total Water Storage Volume	50 AF (16.3 MG)
Pump Stations	5
Wells	2
Total Well Pumping Capacity	1.8 MGD
Pressure Zones	5

The potable water distribution system consists of four turnouts, 14 pressure regulator valves, four pump stations, five reservoirs, and two wells. An additional well is planned for completion in the next few years. Water is distributed to five different pressure zones using pumps and pressure reducing systems. Recycled water is provided by the South Bay Recycling Plant; the recycled distribution system includes 11 miles of main and 87 connections.

The potable system has three emergency water supply interties, two with Alameda County Water District to the north and one with the San Jose Water Company to the south. The City's two wells operate with a combined capacity of 3.4 MGD; they are used for peaking and emergency supply.

The five storage tanks are either in good condition or being retrofitted in FY 2004-2005. Total storage is 16.3 MGD or 150% of current Average Day Demand but less than one day's supply at Maximum Day Demand. No additional storage projects are planned in the near future.

The City is undergoing a long-term replacement program for aging pipelines and has a goal to replace 50 water line segments in FY 2004-2005. The City's FY 2004-2005 approved budget includes funding of $110,000 for hydrants and meters and $467,591 in its capital budget for water improvement projects. In addition, the City's 2003-2008 CIP includes construction of various water related projects including completion of a well upgrade program, water system air relief valve modifications, Ayer Reservoir and Pump station Improvements (including seismic), the South Milpitas Water Line Replacement, and miscellaneous minor water projects.

According to past balance sheets, CIP projects have accounted for less than 10% of the overall expenses.

The City noted in the Final Adopted Budget for FY 2004-2005 that it had completed its Water System Security Vulnerability Assessment in FY 2003-2004, a critical assessment to ensure the future integrity of the water system.

Water Demand

Existing and build-out water demand within Milpitas is as follows:

Demand	Quantity
Existing Average Annual Demand (2003/4)	10.4 MGD
Existing Maximum Day Demand (2003/4)	19.6 MGD
Build-Out Average Annual Demand (2020)	15.0 MGD
Build-Out Maximum Day Demand *	28.3 MGD

** Based on Max Day Factor of 1.88 and 2020 AAD*

In FY 2001-2002, residential customers accounted for 83% of the service connections and 41% of the total water demand. Using the same percentages for FY 2002-2003, residential demand equals 4.26 MGD, or 310 gallons per day per connection.

Water Supply

The City's water supply is treated surface water provided by SFPUC (55%) and the SCVWD (40%). The remaining 5% is recycled water provided by South Bay Water Recycling (SBWR). The City only has two operating wells which are used for emergency purposes. The City is also actively researching additional opportunities to increase the use of recycled water.

The City does not provide any water treatment or groundwater recharge. All water is pre-treated by the wholesaling agencies and the City pays a groundwater pump tax to the SCVWD to cover recharge services.

Milpitas' current and contractual water supply is as follows:

Supply	Current Volume	Maximum Available (Contractual)	Percent of Total
San Francisco Public Utilities Commission	5.7 MGD	31.0 MGD	63%
Santa Clara Valley Water District	4.2 MGD	14.4 MGD	30%
Groundwater Wells	0.5 MGD	3.4 MGD	7%
Total	10.4 MGD	48.4 MGD	100%

Although the City has diversified its sources of supply between the two wholesalers, it is still vulnerable to shortages caused by successive dry years. The City's 2002 Urban Water Management Plan states:

> "Although the City has planned for adequate supplies to meet demands through 2020, the City will be impacted by drought shortages. During drought periods, water wholesalers will not have supplies to meet demands, and some form of water allocation may be anticipated."

This allocation for periods of limited supply is applicable to agencies throughout SFPUC's service area, and has been addressed by the agencies through BAWSCA.

Water Storage

Adequate water storage is not a significant concern for the City of Milpitas. Current storage capacity is 16.3 MG, which is 150% of the Average Daily Demand. In addition, groundwater wells can be considered an additional water storage facility in the event of an emergency. No new water storage facilities are planned for the future, although the CIP includes $200,000 in funding for reservoir evaluation and upgrades in FY 2004-2005.

Summary

Overall, the City has adequate supply to meet the current and projected demands for its service area. It does rely heavily on imported water, although it is evaluating options to increase groundwater availability for emergency use. The City has an ongoing capital improvements program to address aging infrastructure and other infrastructure needs.

3. Financing Constraints and Opportunities

The City operates the water utility as an enterprise activity. The following table summarizes the financial activity in the Water Fund for FY 2002-2003, per the audited statement of revenues, expenditures and reserves.

City of Milpitas – Water Fund FY 2002-2003 Financial Summary			
Revenue -	Water Sales	$10,746,080	94%
	Other Revenue	$685,920	6%
	Total	$11,432,000	100%
Expenses -	Operations	$1,372,652	11%
	Water Purchases*	$6,685,138	52%
	CIP Projects	$1,195,000	9%
	Admin/Management	$842,341	7%
	Dep./Ins./Transfers/Other	$2,706,770	21%
	Total	$12,801,901	100%
Reserves		$240,000	2% of Revenue

** Purchases from SFPUC and SCVWD*

The City has four funds that are related to water service: Water Fund, Water CIP Fund, Water Line Extension Fund, and Recycled Water Fund. Operational fund transfers are used to cover expenditures

included in the budgets of other funds. The Final Adopted Budget for FY 2004-2005 includes a transfer of $3,023,103 from the Water Fund to the General fund to cover expenses related to water bill collections, fire department, planning department, financing, and customer support services rendered by other departments of the City.

As an enterprise activity, revenues generated by water sales are expected to cover the costs associated with the water utility service. The Department develops its own internal budget projections and adjusts fees accordingly on an annual basis. The City operates its water utility using a "pay as you go" approach, using reserves to finance capital improvement projects. Improvement projects are initiated when adequate funding has been accumulated. The City appears to maintain a relatively low level of reserves given this approach. In the event of an emergency construction project, the aggregate water funds may not have adequate reserves available and the City would be forced to find alternative funding sources.

The City has an AA credit rating. As of August 2004, the City had no outstanding bonds or debt related to water service. In the State Controller's Report for FY 2001-2002, the only long term debt identified for Milpitas is $8.61 million for technology. The last audit was completed by Maze and Associates in June, 2003 and the results were not qualified.

4. Cost Avoidance Opportunities

The City is actively utilizing cost avoidance and cost savings opportunities for various aspects of the water delivery process. The most recent measure noted by the City was the development of a Geographic Information System (GIS) inventory of pipelines and other infrastructure. The GIS database can be used to archive record drawings and store historical maintenance/leaks/breaks for each facility. The information can be integrated into both hydraulic modeling software and asset management software. Field operations staff is able to access the database in the field using hand-held computers. This accessibility allows staff to quickly identify pipeline locations, sizes, materials and system configurations.

In addition to the use of technology, the City has an ongoing preventative maintenance program for aging pipelines, reservoirs and pump stations. One of the program goals includes the replacement of 50 pipeline segments each year. The City did not identify how they prioritize replacement projects, but the evaluation likely consists of a combination of age, pressure capacity, and history of breaks or leaks. Development and utilization of a hydraulic model would also assist in identifying necessary pipeline replacement areas.

5. Management Efficiencies

The City's Department of Public Works manages the water utility with the following staff:

Staff Type	Number FTE's
Management/Administrative	6
Operational	6
Professional/Support	2
Total	14

Included under Management/Administration are four employees that assist with finances, budgets, meter reading and customer support. When engineering, design or inspection work is required beyond the capabilities of in-house staff, the City uses consultants as necessary.

The City uses performance indicators for each department, which are evaluated annually. For utility maintenance, the following measurements are tracked: customer service requests, underground locate requests, alarm response, water meters set and repaired and water lines repaired.

In the Final Adopted Budget for FY 2004-2005, the City noted that in FY 2003-2004 interim Water Distribution Certifications had been obtained for the entire Utilities staff. The objectives for FY 2004-2005 include obtaining permanent certifications for the staff as well as revising all standard operating procedures related to utility maintenance.

The City tracks customer complaints annually. There were 311 registered complaints in 2003. 156 of the complaints were reports of water leaks, of which 129 were responded to by city crews. Low Pressure (14%), Color (8%), Air Bubbles (7%), No Water (7%) and Odor (5%) were the top five non-leak related complaints by customers. It was noted that air bubbles and odor problems in November and December were due to SFPUC malfunctions or repairs.

The City uses planning documents to guide operations and system improvements. Its Water Master Plan was completed in 2002. Their Urban Water Management Plan was completed in 2000 and will be updated in 2005.

6. Shared Facilities

Milpitas participates in water conservation programs sponsored by the SCVWD. The SCVWD administers a program consisting of water use surveys, water-wise schools, and youth poster contests along with five other residential and five commercial programs.

The City has emergency water interties with both Alameda County Water District to the north and the San Jose Water Company to the south. These jointly-owned and maintained connections provide as-needed emergency water to pass between agencies.

Milpitas has purchasing agreements with SFPUC, SCVWD and the South Bay Water Recycling program. The City is also a member of BAWSCA, participating in the regional coordination that occurs through that association.

Milpitas is not a signatory to the California Urban Water Conservation Council's Memorandum of Understanding regarding urban water conservation but the City does implement all 14 Best Management Practices through its partnership with SCVWD.

7. Rate Restructuring

Supply Rates

The City is expecting water supply rates from SFPUC and SCVWD to continue to increase significantly over time, which will result in rate increases for its water customers. The City sees this as one of its most significant challenges in the next few years.

Demand Rates

Milpitas uses a two-tier residential rate structure and higher rates for irrigation use to promote water conservation. The unit rate increases from $1.29 to $2.71 per billing unit for water usage over 20 units within a bi-monthly billing period. (A unit of water is equivalent to 100 cubic feet, or 748 gallons of water.) In addition to the water usage rate, there is also a fixed meter charge based on the meter size. Meter rates increase according to size. A ¾-inch residential water meter is charged $17.37 bi-monthly.

Using year 2000 per capita demand of approximately 78 gallons-per-day (GPD) and an estimated 3.1 residents per home, average residential demand was only 9.7 CCF per month. The City's average per capita demand is 86 GPD and the average residential use is 26 CCF for a two month period.

For purposes of comparison, this report uses the rates for a standard residential customer using a ¾" meter and 500 gallons a day, or 20 CCF (14,961 gallons) per month. The monthly bill for a Milpitas customer would be $48.69 (20 @ $1.29 + 20@ $2.71+ $17.37)/2.

Rate adjustments are made annually through a public hearing process. The Financial Master Plan completed in April 2003 provides the basis for the increased rates. The Plan includes a "pay-as-you-go" approach therefore rates are adjusted as needed to meet current CIP and financial needs. The City is working to increase reserve levels for future CIP needs. Rates increased 7% in FY 2002-2003, another 13.3% in FY 2003-2004, and 12% in FY 2004-2005. An addition 20% increase is planned over the next two years. These increases reflect the increased cost of wholesale water as well as general cost increases associated with utility operations and maintenance.

8. Government Structure Options

Milpitas' water utility is operated by the City's Public Works Department. Other City departments such as Finance, Legal, Planning and Fire provide related services. No other government structure options were noted.

9. Local Accountability and Governance

Milpitas provides information pertaining to water service on the City's website (www.ci.milpitas.ca.us), including water conservation and water reuse. The City prepared and published their annual 2003 Water Quality Report in June 2004. The report is available at the City as well as online. The annual financial reports and budgets are also posted on the website.

The water utility is addressed by the City Council during Council meetings. Council members are elected at large to serve staggered, four-year terms. The Council meets the first and third Tuesday of each month at 6:00 PM. Meeting agendas are advertised the Friday prior to the meeting. Agendas and minutes are posted on the City website.

The City is meeting the required standards for local accountability and governance, with public notice of council meetings and actions.

– DETERMINATIONS –

1) Population and Growth

Milpitas currently has a population of 64,000 and a historic annual growth rate of 3.8%; population in 2020 is projected to be 76,406 per current land use designations. ABAG estimated Milpitas' population at 65,500 in 2005 with an annual growth rate of 1.6% to reach 91,400 by 2030.

The City has two distinct geographic areas, and based on land availability, there is the potential for 974 additional residential units in the valley and 88 in the hillside area.

The City has planned for growth and development through its General Plan, Water Master Plan and Urban Water Management Plan.

2) Infrastructure Needs and Deficiencies

Milpitas relies primarily on treated surface water for its supply. Two groundwater wells provide as-needed peaking and emergency supply.

Recycled water is supplied by the San Jose/Santa Clara Water Pollution Control Plant through the South Bay Water Recycling program. Demand for recycled water is increasing.

The current CIP is primarily focused on system maintenance and replacement of aging facilities.

Existing water storage capacity is adequate by industry standards and the existing wells can provide for additional emergency supply in the event of a service interruption for treated surface water.

3) Financing Constraints and Opportunities

Milpitas operates its water utility as an enterprise activity and manages a balance between the costs associated with water purchases, CIP projects and operations. Improvements are made on a "pay as you go" basis with no outside financing or loans.

The City maintains relatively low reserve levels for the water utility which may have a negative impact in the event of an emergency construction need. A financial master plan identified phased rate increases to increase reserves.

4) Cost Avoidance Opportunities

Milpitas has adopted the use of technology to help inventory and manage their water facilities. A GIS database has been created and is being utilized by field crews on a regular basis to identify pipeline locations and features.

The majority of CIP projects over the next five years pertain to replacements, upgrades and modifications to improve existing facilities, effectively resulting in preventative maintenance and potential cost avoidance in the event of a failure.

5) Management Efficiencies

The City's Public Works Department maintains a series of performance indicators with established goals and tracks them annually. Customer complaints are tracked monthly by complaint type. Outside consultants are used for technical and/or professional services as-needed to minimize full-time staff.

6) Shared Facilities

Milpitas is a member agency of BAWSCA and is a partner with the SCVWD for implementation of water conservation measures. The City jointly operates several water turnout facilities and is a stakeholder in the South Bay Water Recycling Program.

7) Rate Restructuring

Milpitas uses a two-tier residential rate structure and higher rates for irrigation use to promote water conservation.

The expected increase in the cost of treated water from both SFPUC and the SCVWD represents a significant challenge to the City in terms of its ability to moderate future rate increases.

Milpitas adjusts its water rates annually based on internal budget projections.

8) Government Structure Options

The water utility is a division of the City of Milpitas's Public Works Department. The water utility division utilizes other departments within the City to accomplish such tasks as finance, planning, fire protection, and information technology for operation of the utility. No other government structure options were noted.

9) Local Accountability and Governance

The City of Milpitas ensures local accountability and governance through the oversight and management provided by the City Council. The water utility is addressed during City Council meetings. The City provides a substantial amount of water conservation and recycling information to its residents.

C. CITY OF MORGAN HILL

Overview

The City of Morgan Hill is located in the southern portion of Santa Clara County, between the Coyote Valley area and unincorporated San Martin. The City encompasses approximately 12 square miles with a population of nearly 35,000. The water utility is managed by the City's Public Works Department. The City relies on groundwater as its only source of supply, and groundwater quality is a serious issue. The City has experienced high nitrate levels in two of its wells and perchlorate contamination in three. Growth within the City and surrounding jurisdictions is projected to be strong through 2020.

1. Growth and Population

The City of Morgan Hill currently has an estimated population of 34,918 within a 12 square mile area. Its sphere of influence extends from north of Cochrane Road southward to San Martin. The City adopted a long-term Urban Growth Boundary (UGB) in 1996 as a growth management measure. The principal goals of Morgan Hill's UGB are to ensure compact growth patterns and infill development, enabling the City to provide and maintain urban infrastructure in a cost-effective manner. The City is in the process of updating its Urban Limit Line and Urban Growth Boundary and is currently conducting public meetings on the issue.

The City is projecting a population of 48,000 in 2020, which represents an average annual growth rate of 2%. ABAG estimates that Morgan Hill's population is 41,000 in 2005, increasing to 50,000 by 2030 with a 0.9% annual growth rate. In 1990 Morgan Hill voters approved Measure P which extends the City's "Residential Development Control System" to 2010. This measure allows a limited number of homes to be built each year according to a point system based on a variety of factors. In March 2004, voters approved Measure C which extends the core provisions of Measure P through 2020.

In recognition of the dynamics within the South County region, Morgan Hill has incorporated an additional element into its General Plan entitled "Regional Coordination." The City is aware that continued development both to the north and the south of its sphere of influence could heavily influence future growth, traffic and quality of life in Morgan Hill, including water service. The goals of the element are as follows:

1) Balanced urban growth in the South County
2) Limited, appropriate urbanization of unincorporated San Martin area
3) Efficient, phased development of Coyote Valley
4) Effective, stable growth of the South County
5) An effective, productive South County Joint Planning Advisory Committee

The City currently provides service to the following connection types:

Connection Type	Count	Percent of Total
Residential	9,861	89%
Manufacturing/Industrial/Commercial	757	7%
Irrigation	484	4%
Recycled	NA	
Total	11,102	100%

Morgan Hill has 21,700 acres within its planning area, and less than 3,400 acres were developed with residential, commercial or industrial uses as of 2001. Per the City's 2001 General Plan, the urban land use designations are allocated as follows:

Urban Land Use Designation	Acres	Percent of Total
Residential	4,998	72%
Commercial/Mixed Use	564	8%
Industrial	1,156	17%
Public Facilities	253	3%
Total	6,971	100%

The City has addressed the impact on water service from growth and the projected increase in population in its 2001 General Plan, 2002 Water Master Plan and 2001 Urban Water Management Plan.

2. Infrastructure Needs and Deficiencies

Morgan Hill's water system is comprised of the following:

Facility	Quantity
Pipelines	160 miles
Reservoirs (Tanks)	11
Total Water Storage Volume	9.48 MG
Pump Stations	10 (booster)
Wells	15
Total Well Pumping Capacity	12.9 MGD
Pressure Zones	18

The City adopted its Water Master Plan in 2002. The Plan provides for system improvements based on projected growth and increased demand. The Master Plan used the City's General Plan as the basis for the system requirements analysis. Recommendations were made for improvements to supply and storage capacity. Those that are related to future growth will be implemented when development occurs and capacity is needed. Recommendations include the following:

- Supply Capacity: construct 4 new wells by 2020, increasing capacity by 5.7 MGD. Capacity will be needed at the following levels: 2005 – 14.3 MGD, 2010 – 15.8 MGD, 2015 – 17.2 MGD, and 2020 – 18.7 MGD.
- Storage Capacity: increase capacity by 3.25 MG over five pressure zones.

The Master Plan includes a recommended Capital Improvement Program based on the findings and recommendations of the study.

The City noted several infrastructure improvements that are either planned or in the process of being implemented. Projects include two new wells to be constructed in FY 2005-2006. The City is also constructing a new 1.0 MG storage reservoir in FY 2004-2005. The five year budget also includes funding for new water mains, booster pump rehabilitation, well rehabilitation, water main replacement, and polybutylene service replacement.

Water Demands

Existing and build-out water demands within Morgan Hill are as follows:

Demand	Quantity
Existing Average Day Demand	6.8 MGD
Existing Maximum Day Demand*	13.2 MGD
Existing Peak Demand Capacity	14.5 MGD
Build-Out Average Day Demand (2020)	9.3 MGD
Build-Out Maximum Day Demand (2020)	18.6 MGD

Per the 2002 Water Master Plan, Morgan Hill has experienced a range of per capita consumption rates in the past. This is expressed as "gallons per capita per day" (GPCD). The high was 216 GPCD in 1985 and the low was 171 gpcd in GPCD. The City currently uses a rate of 200 GPCD for its planning. Using an estimated household size of 3.46 persons per ABAG projections, the daily demand per residential unit is 692 gallons.

Water Supply

Morgan Hill's current and contractual water supply is as follows:

Supply	Current Volume	Maximum Available (Contractual)	Percent of Total
Groundwater	7,730 AF	NA	100%
Total	7,730 AF	NA	100%

Volume produced per SCVWD records for Calendar Year 2003

Morgan Hill overlies the Llagas Sub-basin and shares this groundwater resource with the other water providers in the South County. Groundwater is the sole source of domestic supply as the City has no inter-connections to other systems. The City operates 15 wells on the valley floor, treating the water at

the wellhead prior to distribution. Groundwater recharge is performed by the SCVWD, and the City pays a pump tax to cover its share of those costs.

Morgan Hill is at the northern end of the Llagas Sub-basin, and the groundwater flow is believed to be in a south-southeasterly direction towards San Martin and Gilroy. Surrounding agricultural land use and previous manufacturing operations in the area have impacted groundwater quality, as has the continued use of septic systems outside the Urban Service Area boundaries. Septic systems and agriculture are known to increase nitrate levels in groundwater. The City has two wells where nitrates have been identified; one uses blended water to keep levels below the maximum allowable level for drinking water quality. The other well exceeds the limits and has been placed in a standby position.

Perchlorate contamination from previous manufacturing operations in the area has been identified in several of the City's wells. Two wells now operate with ion exchange perchlorate removal systems. The City is actively participating in the Perchlorate Working Group, along with the SCVWD, Gilroy and the County, to restore groundwater quality in the most expedient, cost-effective manner. The group is also working for cost recovery to ensure that the financial burden for treatment does not rest on the water utility agencies.

Recycled water is not presently available in Morgan Hill as it is not cost effective to deliver it into the City from the South County Regional Wastewater Authority treatment plant in northern Gilroy.

Water Storage

Prior to construction of a new 4.0 MG reservoir in 2002, the City noted that it did not meet national standards for water storage capacity with only a one day supply. Another new reservoir will add an additional 1.0 MG of capacity; construction is scheduled to begin in FY 2004-2005. The 2002 Water Master Plan includes recommendations, based on Year 2020 conditions, to add an additional 2.25 MG of storage for four pressure zones in addition to the 1.0 MG reservoir to be constructed in FY 2004-2005.

Summary

Morgan Hill relies on groundwater extracted from the Llagas Sub-Basin and has no connections to other systems or sources of supply. The City extracted 7,730 acre feet in 2003. Groundwater quality is a concern; the city has nitrate issues on two of its wells and perchlorate contamination in several. The City is actively working to protect its groundwater resource including participation in the Perchlorate Working Group. The City is correcting its storage deficiency through the construction of a new reservoir. Morgan Hill has addressed its infrastructure needs through its 2002 Water Master Plan, Capital Improvements Program, and 2001 Urban Water Management Plan.

3. Financing Constraints and Opportunities

The City of Morgan Hill finances its water utility operation through three funds: Water Operations, Meter Reading/Repair, and Water Conservation. Major capital improvements are financed through the

Water Capital Expenditure Fund (AB 1600) and the Water Replacement Fund. The following table summarizes the financial activity in the Water Operations Fund for FY 2003-2004:

City of Morgan Hill – Water Operations Fund FY 2003-2004 Financial Summary			
Revenue -	Service Charges	$5,783,350	86%
	Fees	$851,979	13%
	Other Revenue (Interest)	$22,320	1%
	Total	$4,850,745	100%
		$6,612,649	
Expenses -	Operations		
	Water Purchases*	$1,332,666	20%
	Admin/Management		
	Dep./Ins./Transfers/Other	$344,112	5%
	Total	$6,750,737	100%
Reserves		$1,223,635	19% of revenue

** SCVWD pump tax*

The Water Operations budget includes an annual $400,000 transfer to the Street Maintenance fund. This covers the costs of street repairs due to water system repairs. (It is also a mechanism used by some jurisdictions to fund street maintenance due to limited other funding options.) The FY 2004-2005 budget also includes a $20,000 transfer to the General Fund to cover general administrative services.

Morgan Hill has used bonds to finance major water infrastructure projects. The City has an AAA credit rating from Standard and Poor's for its refinanced, insured Certificates of Participation (Water System Improvement Projects) Series 1999. In 2003 the City refinanced a 1993 loan made by the California Statewide Communities Development Authority. That loan originated as a refinancing of an original 1980 loan from the State.

The City was audited by an independent auditor for FY 2002-2003. The audit results were not qualified in any way.

The City noted in the introduction to the Guide to the Sustainable Budget Strategy that long-term structural changes were needed to bring the City's budget into balance as the current level of spending on basic city services was not sustainable. Reserves have been used to maintain levels of service across the city. In the FY 2004-2005 budget, $1.7 million in reserves will be used even after $900,000 in permanent reductions in the City's General Fund budget. The City is looking at opportunities to add additional revenue although specifics were not identified.

The State's budget act of 2004 significantly changed how local revenues are allocated. Cities within California are required to contribute to the State's General Fund in both FY 2004-2005 and 2005-2006.

Morgan Hill's estimated contribution in the first year is approximately $342,961. The impact of this reduction in revenue will likely affect all city departments, including the water utility.

4. Cost Avoidance Opportunities

The City is actively pursuing cost avoidance opportunities in all areas, including the water utility. The City adopted a Sustainable Budget Strategy in the spring of 2004 to proactively address the financial constraints that were projected for the next several fiscal years. As a part of this strategy, guidelines were developed to help in the decision making process. One of the guidelines stressed that critical services would be preserved to the greatest extent possible and less critical services would be reduced first. For the water utility, the two areas that are considered "less critical" are the landscaping around water facilities and raising or establishing blow-offs at dead end water mains. The City recognizes that cost avoidance is an essential activity at this point.

The City's 2002 Water Master Plan serves as a significant cost avoidance measure. The Plan includes recommendations for system improvements that will allow the City to implement the projects in a timeframe that coincides with projected increases in demand. It also includes recommendations that will allow the City to avoid costly repairs in the future. The Plan includes analysis on the extent to which projects will benefit existing development or new development. This analysis allows the City to charge the appropriate fees when service is extended to new developments.

The Public Works Department utilizes the services and functions of other City departments such as finance, legal, and planning to improve cost efficiency for the water utility.

5. Management Efficiencies

Morgan Hill manages its water utility with the following staff:

Staff Type	Number FTE's
Management/Administrative	2
Operational	12
Professional/Support	3
Total	17

The City uses performance measurement tools to evaluate the efficiency and productivity of the water department. The results are included in the annual budget. The City is also in the process of upgrading its Supervisory Control and Data Acquisition System (SCADA) which allows staff to remotely monitor the water storage and delivery system and make adjustments as necessary to maximize efficiency.

The City adopted its Water Master Plan in 2002 and Urban Water Management Plan in 2001. The Urban Water Management Plan will be updated in 2005 in accordance with the State's requirements. The City uses a 20-year planning horizon for its capital improvement program and annually updates a rolling five year budget.

The City is achieving management efficiencies through its service approach and coordinated planning with other departments.

6. Shared Facilities

The Morgan Hill Public Works Department shares facilities with other agencies where appropriate in order to reduce costs and improve efficiencies. The City is actively involved in the Perchlorate Working Group, in partnership with the SCVWD, Gilroy, and Santa Clara County. The group's focus is to promptly and cost-effectively restore groundwater quality in South County. The group is also seeking cost recovery through legal avenues.

Morgan Hill is one of the three jurisdictions participating in the South County Joint Area Plan, a component of the County's General Plan. The Plan provides the framework for a coordinated planning effort in the South County.

The City also partners with the SCVWD on water conservation programs.

7. Rate Restructuring

Supply Rates

Morgan Hill relies on groundwater and pays a pump tax to SCVWD in exchange for groundwater recharge services. The pump tax rates increase annually; the City noted that its rate had increased 25% over the prior year. The City is currently paying the following rate:

SCVWD: Groundwater = $200/AF

Pump tax rates are expected to continue to increase significantly over time, which will result in rate increases for Morgan Hill water customers. In the spring of 2004, the City adopted a Sustainable Budget Strategy to proactively address future financial constraints due to lower revenue projections and State-initiated changes in local revenue allocations. These financial conditions do not provide a cushion for the City to use reserves to stabilize rates.

Demand Rates

Morgan Hill uses a multi-tiered rate structure to promote water conservation. There are separate rate structures for accounts in the City and in the unincorporated area. The County residents pay rates that are approximately 55% higher than those in the City. Low income residents are offered a reduced rate.

The rate tiers are based on billing units, with each unit equal to 748 gallons. The first tier is through 10 units, the second is through 30 units, and the third is anything over 30 units. The City also charges a monthly base rate.

For purposes of comparison, this report uses the rates for a standard residential customer using a ¾" meter and 500 gallons a day, or 20 CCF per month. The monthly bill for a Morgan Hill city customer would be $35.50 (10 x $1.01 + 10 x $2.02 + $5.20 base rate = $35.50). Customers also pay a 5% surcharge on total water fees each month to help offset the cost of perchlorate treatment. If the City recovers some of its treatment costs through legal action, ratepayers may be reimbursed in the future.

The City increased rates 2% across the board effective January 1, 2005. The increase is part of a series of increases to occur through 2007 in order to meet the increasing operating costs, capital improvement needs for the water system, debt service, and perchlorate treatment costs.

8. Government Structure Options

The City of Morgan Hill operates its water utility through the Public Works Department. The Department uses the services of other city departments as needed for specific functions related to water service, such as legal, finance and planning.

The City's Urban Service Area is not coterminous with the boundaries of its incorporated area. There are portions of incorporated area that are not served by the City's water system as well as unincorporated areas that are. The City noted that it serves 211 accounts outside the City's boundaries. The law requiring LAFCo approval of out-of-agency agreements was enacted in 1994; services existing prior to 1994 do not require LAFCo review and approval. Water service was provided to properties within the Holiday Lake Estates area prior to 1994. Aside from Holiday Lake Estates Morgan Hill is providing service to 130 connections outside its boundaries.

9. Local Accountability and Governance

The City of Morgan Hill is governed by a five-member City Council. Council members are elected at large to serve staggered four-year terms. The water utility is addressed by the Council during regular meetings. The Council meets the first and third Wednesday of each month at 7:00 PM in the Council Chambers. Meeting notices are posted in the City's offices as well as on the website.

Morgan Hill provides some information related to its water service on the City's website (www.morgan-hill.ca.gov). The City's budget and annual financial reports are also available on line. The City's annual 2003 Water Quality Report is available to the public on the website or in City offices.

The City is meeting the acceptable standards for local accountability and governance, with public notice of council meetings and actions as well as water service information.

– DETERMINATIONS –

1) Population and Growth

Morgan Hill had an estimated population of 35,000 in 2003. The City projects its annual growth rate to be 2.0% to reach a population of 48,000 in 2020. ABAG estimated Morgan Hill's population at 41,000 in 2005 with an annual growth rate of 0.9% to reach 50,000 by 2030.

The City has planned for growth and development through its 2001 General Plan, 2002 Water Master Plan and 2001 Urban Water Management Plan.

2) Infrastructure Needs and Deficiencies

Morgan Hill relies on groundwater extracted from the Llagas Sub-basin through 15 wells in the valley floor.

Groundwater quality is a concern; nitrates have affected water quality in two wells and perchlorate contamination has affected several wells, with two currently equipped with ion exchange treatment systems.

The City plans for infrastructure needs through its 2002 Water Master Plan and CIP program. For FY 2004-2005, the CIP has $1.46 million budgeted for water system projects.

3) Financing Constraints and Opportunities

Morgan Hill is facing increasing financial constraints due to cost increases and State budget impacts that may affect the water utility.

The City has been using reserves at an unsustainable rate to maintain current levels of city services.

The City has adopted a Sustainable Budget Strategy, imposed permanent General Fund budget reductions, and is considering new revenue sources.

4) Cost Avoidance Opportunities

Morgan Hill actively pursues cost avoidance measures related to water service; it has identified those services that are considered "less critical" and may be reduced in light of funding constraints.

The City's 2002 Water Master Plan provides recommendations and benefit analysis to ensure the timely implementation of system improvements and appropriate cost allocations between current and future users.

5) Management Efficiencies

Morgan Hill is achieving management efficiencies for its water service through detailed planning and coordination with other city departments and annually evaluates performance against benchmark goals.

The City uses a Supervisory Control and Data Acquisition System (SCADA) to improve efficiency in the water delivery system.

6) Shared Facilities

Morgan Hill shares facilities with other agencies where appropriate to benefit its water utility service, such as groundwater recharge and conservation programs provided by the SCVWD.

The City is an active participant in the Perchlorate Working Group whose focus is to restore groundwater quality in South County.

7) Rate Restructuring

Morgan Hill uses a tiered rate structure to promote water conservation. The rate structure includes higher rates for accounts outside the city.

The City has planned incremental rate adjustments through 2007 to cover increased costs for operations, capital improvement needs, debt service and perchlorate treatment.

The expected increase in the pump tax imposed by SCVWD represents a significant challenge to the City in terms of moderating future rate increases.

8) Government Structure Options

Morgan Hill operates the water utility through its Public Works Department. The services of other City departments are used to accomplish such tasks as finance, planning, fire protection, and legal. No other government structure options were noted.

9) Local Accountability and Governance

The City of Morgan Hill ensures local accountability and governance through the oversight provided by the City Council. The water utility is addressed during City Council meetings and information is available to the public on line and in printed form.

D. CITY OF MOUNTAIN VIEW

Overview

The City of Mountain View is located in northern Santa Clara County between the cities of Sunnyvale and Palo Alto. The City of Mountain View Public Works Department manages the water system. The Department provides water to 72,006 residents in a water service area that encompasses 11.7 square miles. California Water Service Company (CalWater), a private water purveyor, serves approximately 650 customers within a small southern portion of the City's service area. The City is a member agency of BAWSCA.

1. Growth and Population

The City of Mountain View has a current population of 72,006 residents. ABAG estimates that Mountain View's population will increase to 89,600 by 2030 with a 1.0% annual growth rate. According to the City's 2000 Urban Water Management Plan (UWMP), the city is 97% developed. Water demand is expected to grow consistent with population growth. Over the past decade, there has been a steady transition from industrial land uses to mixed use.

The City currently provides service to the following connection types:

Connection Type	Count	Percent of Total
Residential	13,421	85%
Manufacturing/Industrial/Commercial	1,572	10%
Irrigation	778	5%
Construction (temporary)	33	<1%
Total	15,804	100

The predominant land use within the City is residential. The manufacturing /industrial/commercial category reflects the mixed-use transition that has occurred. Land use within the City is not expected to change significantly over the next twenty years. Population growth will be accommodated through mixed-use projects and infill development.

The City has addressed the projected increase in population through its General Plan and 2000 Urban Water Management Plan.

2. Infrastructure Needs and Deficiencies

Mountain View's existing water system facilities include the following:

Facility	Quantity
Pipelines	157.1 miles
Reservoirs (Tanks)	2
Total Water Storage Volume	21 AF (6.8 MG) (3 and 18 AF)
Pump Stations	2
Wells	7
Total Well Pumping Capacity	9 MGD
Pressure Zones	3

Pipeline and storage capacity is properly operated to provide fire flows throughout the city. Residential fire flows are 900 GPM and commercial is 1,500 GPM.

The City is constructing mid-term storage improvements recommended in its 1992 Water Master Plan. The storage improvements include a 2.3 MG expansion of an existing reservoir and construction of a new 8 MG reservoir.

Water Demands

The City's1992 Water Master Plan projects that the ultimate demand (2015) would range from 12.9 MGD to 16.5 MGD. The low range assumes continued water conservation and increased utilization of recycled water, which appears to be the scenario today. The majority of projects identified in the master plan involve construction of additional storage facilities.

Existing and build-out water demands within Mountain View are as follows:

Demand	Quantity
Existing Average Annual Demand (2003/4)	12.5 MGD
Existing Maximum Day Demand (2003/4)	21.0 MGD
Existing Peak Demand	22.8 MGD
Build-Out Average Annual Demand (2020)	12.9 to 16.5 MGD
Build-Out Maximum Day Demand *	21.7 MGD

** Based on Max Day Factor of 1.68 and minimum Build-out AAD*

In FY 2002, residential customers accounted for 85% of the service connections and 54% of the total water demand. Using the same percentages for FY 2003, residential demand equals 6.75 MGD, or 503 gallons per day per residence.

Water Supply

Treated surface water comprises 99% of Mountain View's water supply. The remaining 1% is from groundwater. The City plans to increase its groundwater supply for emergency purposes and is actively researching additional ways to utilize recycled water.

Mountain View's water service area is divided into three zones. Water delivered by the SFPUC is supplied to Zones 1 and 2, and water from the SCVWD supplies Zone 3. The available maximum day volume from the SCVWD is 2.3 MGD. Mountain View's current and contractual water supply is as follows:

Supply	Current Volume	Maximum Available (Contractual)	Percent of Total
San Francisco Public Utility Commission	19 MGD	26 MGD	90%
Santa Clara Valley Water District	2.1 MGD	2.3 MGD	9%
Groundwater Wells	<1 MGD	n/a	<1%
Recycled Water			0%
Total	21.1 MGD	37.3 MGD	100%

The City currently self-fluoridates its water supply from the SCVWD and wells. The SFPUC now fluoridates all of its water at treatment facilities in the East Bay.

Currently, groundwater is used primarily as emergency backup supply. The City is investigating its operational production constraints for the wells.

Water Storage

Adequate water storage is a concern for the City of Mountain View. Current water storage is 6.8 MG, which is one-half the average daily demand, and less than the 7.1 MG listed in the 1992 Master plan.

According to a survey conducted as part of the preparation of the 1992 Master Plan, the surrounding communities of Sunnyvale, Santa Clara, Milpitas, Redwood City and Palo Alto had between 1 and 2 average days worth of storage. Included in the Master Plan is a zone by zone analysis for required storage using a combination of operational, emergency, and fire flow requirements. The required additional storage based on typical criteria was 18.2 MG for a total of 25.2 MG.

The City's CIP includes construction of the Miramonte Reservoir (2.3 MG) and Graham Middle School Reservoir (7.8 MG). The expected completion date for the Miramonte Reservoir is fall 2005. The Graham Middle School Reservoir is under construction.

Summary

The City replaces approximately two miles of pipe and 500 water services, appurtenances, gate valves and fire hydrants per year. Mid-term storage deficiencies will be addressed with the completion of a 2.3

MG reservoir expansion and the new 8 MG reservoir. According to the Water Master Plan, the system is in excellent shape, including operational stability, detailed planning documents and management strategies and a strong long-term CIP. The City has adopted an aggressive infrastructure replacement schedule, and has been implementing the recommended CIP projects from the 1992 Master Plan. The City is also in the process of updating the 1992 Water Master Plan.

3. Financing Constraints and Opportunities

The City operates the water utility as an enterprise activity. The following table summarizes the audited FY 2002-2003 statement of revenues, expenditures and reserves for the Water Fund.

City of Mountain View – Water Fund FY 2002-2003 Financial Summary			
Revenue -	Water Sales	$13,281,094	85%
	Other Revenue	$2,259,521	15%
	Total	$15,540,615	100%
Expenses -	Operations	$4,467,464	29%
	Water Purchases *	$5,463,389	35%
	CIP Projects	$3,424,000	22%
	Admin/Management	$1,182,150	7%
	Dep./Ins./Transfers/Other	$1,050,233	7%
	Total	$15,587,236	100%
Reserves		$5,356,930	34% of Revenue

** Purchases from SFPUC and SCVWD*

As an enterprise fund, revenue is expected to cover the costs associated with the water utility. The Department develops its own internal budget projections and adjusts fees accordingly on an annual basis. The City last conducted a rate study in the mid 1990's.

The City received an AAA credit rating for completion of the last reservoir project. As of August 2004, the Water Fund had no outstanding bonds or debt. The City is currently accepting bids to issue a $10.5 million dollar bond to fund the Graham Reservoir Project. This bond will have a 25-year life span. Approximately $650,000 per year will be used to retire the bonds.

4. Cost Avoidance Opportunities

The City is actively utilizing cost avoidance and cost savings opportunities for various aspects of the water delivery process. Four different examples were discussed during the questionnaire and follow up interview process with the City.

Reservoir storage is a significant need of the City. Considering the large land requirement necessary for a reservoir and the high land values within the City, an alternative was needed for the facility site. An agreement is being negotiated between the City and the Mountain View School District to locate a

reservoir at the Whisman Middle School. Per the proposed agreement, the City will provide water and maintenance to the school's sports fields in exchange for allowing the City to locate a storage facility under the fields. Such an agreement produces a win-win situation and cost savings for both parties.

Another unique cost saving example is the use of a turbine generator at one of the SFPUC turnouts. Because the connection point for the imported water has a significantly higher pressure than the City needs, a pressure reducing station is required. The City has chosen to install a turbine generator that turns the excess pressure into electricity and feeds it back into the City's power grid. The results become a cost credit to the City's overall power bill.

The Department hires consultants on an as-needed basis for highly technical design or engineering services. This allows for a fewer staff members, and provides cost savings during slower production periods.

As part of the recycled water program shared by the surrounding agencies, the City is able to off set maintenance and infrastructure expenses by cost sharing.

5. Management Efficiencies

The water utility portion of the Department of Public Works operates with the following staff:

Staff Type	Number FTE's
Management/Administrative	4.25
Operational	22.80
Professional/Support	6.95
Total	34.00

Management maintains a series of Performance Measures/Workload Measures for various aspects of the Public Works Department, including quarterly target numbers for water quality complaints, number of water main breaks and percent response time standards met for various utility customer service requests (including Streets and Utilities Maintenance). For 2004, there were 202 customer calls (<110 target) and 6 breaks (<6 target). The majority of customer calls are attributed to one algae bloom that affected the SFPUC supply.

The latest Urban Water Management Plan was completed 2000 and the required update will be completed by December 2005. The Water Master Plan was completed in 1992 and the City is currently evaluating the scope for the next Master Plan.

Mountain View is a signatory to the California Urban Water Conservation Council's memorandum of Understanding regarding urban water conservation and implements all 14 Best Management Practices through its partnership with the SCVWD.

6. Shared Facilities

The City of Mountain View is a partner in operating the Water Reuse Program of the Regional Water Quality Control Plant (RWQCP) located in Palo Alto. Program partners include the cities of Los Altos, Mountain View, and Palo Alto; the East Palo Alto Sanitary district; and the Town of Los Altos Hills. The RWQCP is a Regional Wastewater Treatment Plant, established in 1980, which produces recycled water for golf courses, parks, and landscape irrigation. The City of Palo Alto and Mountain View are evaluating the recycled water potential and have applied for grants to further develop the program.

The City participates in the Santa Clara Valley Water District (SCVWD) water conservation programs. SCVWD administers a program that includes water use surveys, washing machine rebates, low flow toilets, pre-wash spray use nozzle and showerhead aerators.

The City has water interties with both Sunnyvale and Palo Alto. These jointly owned and maintained connections provide as-needed emergency water to pass between agencies.

Water agency staff often attends safety-training courses in conjunction with other agencies.

7. Rate Restructuring

Supply Rates

The City is expecting water rates from SFPUC and the SCVWD to continue to increase significantly over time. This cost increase will be reflected in the rates charged to the City's customers. The City sees this as one of its most significant challenges.

The cost of water paid by the City for treated surface water and groundwater is as follows:

- SCVWD: Treated water = $495/AF, Groundwater = $405/AF
- SFPUC: Treated water = $492/AF

Demand Rates

Mountain View's water utility rates are structured as a multi-tier system, based on meter size and water units consumed per month, in order to promote water conservation. The per-unit rate essentially doubles for each successive tier. A unit of water is equivalent to 100 cubic feet, or 748 gallons of water. In addition to the water usage rate, there is also a fixed meter charge based on the meter size.

For a standard residential customer using a ¾" meter and 500 gallons a day (20 units per month), the 2004 monthly bill would be $48.45 (3 @ $1.22 +17 @ $2.40 +$4.10 meter = $48.45).

Water usage charges provide 85% of the total revenue for the utility. It appears based on overall budget status, that revenue and expenses are currently in balance and that there is not a significant need to restructure rates other than to keep up with future imported water supply costs. It is expected that rates will be increasing another 12% over the next two years due primarily to increased water supply costs.

8. Government Structure Options

The City provides water service to the area within its boundaries, with the exception of the 650 connections served by the California Water Service Company; no other government structure options were noted.

9. Local Accountability and Governance

The City prepared and published their annual 2003 Water Quality Report in June 2004. The report is available at the City and on the City's website (www.ci.mtnview.ca.us).

The City of Mountain View is governed by a five-member City Council. Council members are elected at large to serve staggered four-year terms. The water utility is addressed by the Council during regular meetings. The Council meets the second and last Tuesday of each month at 6:30 PM in the Council Chambers. Meeting agendas are advertised the Friday prior to the meeting.

The City provides a substantial amount of public information on water conservation and water reuse both published and online.

– DETERMINATIONS –

1) Population and Growth

Mountain View is 97% developed with little redevelopment expected in the future.

The City currently has a population of 72,006 and a projected annual growth rate of 0.9%; ABAG is projecting the City's population to reach 89,600 by 2030.

2) Infrastructure Needs and Deficiencies

Mountain View relies on treated surface water supplied by the SFPUC and the SCVWD; groundwater is used for emergency supply purposes only.

The City is pursuing a project through the Water Reuse Program of the Regional Water Quality Control Plant in Palo Alto to provide recycled water in areas of Mountain View.

The City has adopted a CIP and a Water Master Plan and is implementing the recommendations and projects for infrastructure improvements. The City is in the process of updating its 1992 Water Master Plan.

Existing water storage capacity is below industry standards. The City is in the process of constructing a new reservoir and expanding the capacity of an existing reservoir in order to have storage capacity that will exceed average day demands.

3) Financing Constraints and Opportunities

Mountain View operates its water utility as an enterprise activity and manages a balance between the costs associated with water purchases, CIP projects and operations.
The City maintains adequate reserve levels to meet future operating and capital needs.

The City will be incurring a 25-year, long-term debt of $10.5 million by issuing bonds to finance the Graham Reservoir project.

4) Cost Avoidance Opportunities

The City is avoiding land acquisition costs associated with a new reservoir by locating the reservoir on property belonging to the Mountain View School District.

The City is in the process of updating its 1992 Water Master Plan which will provide a plan for future improvements and rehabilitation in the system. This will provide significant cost avoidance measures.

5) Management Efficiencies

The Department of Public Works maintains a series of performance measures with established goals and tracks them quarterly.

6) Shared Facilities

Mountain View is one of the five agencies that own and operate the Regional Water Quality Control Plant, which provides a reliable source of recycled water.

7) Rate Restructuring

Mountain View uses a multi-tiered rate structure that effectively promotes water conservation.

The expected increase in the cost of imported water from both SFPUC and SCVWD represents a significant challenge to the City in terms of moderating future rate increases.

Mountain View adjusts its water rates annually based on internal budget projections.

8) Government Structure Options

The water utility is a division of the City of Mountain View's Public Works Department. No other government structure options were noted.

9) Local Accountability and Governance

The City of Mountain View has a process for ensuring that standards for local accountability and governance are met. The water utility is addressed during City Council meetings.

The City provides a substantial amount of water conservation and recycling information to its water utility customers.

E. CITY OF PALO ALTO

Overview

The City of Palo Alto is located in northern Santa Clara County and is bordered by San Mateo County on the north, Stanford University to the west, and the City of Mountain View to the east. Purissima Hills County Water District and the California Water Service Company are to the south. Water service is provided through the City's Utilities Department. Palo Alto provides water to 58,598 residents within a 26 square mile service area. The City relies on imported pre-treated water from the SFPUC; system upgrades are underway to improve the City's water well storage and distribution system so that groundwater can serve as a source of domestic supply as well. Recycled water is available from the Palo Alto Regional Water Quality Control Plant. The City is a member of BAWSCA.

1. Growth and Population

Palo Alto's estimated population in 2003 was 58,598 residents, excluding Stanford University. The City experienced a significant increase in population in the late 1990's due to the expansive growth of the technology industry throughout the County. ABAG estimates that Palo Alto's population is 74,000 in 2005 (including the City's Sphere of Influence). The population is expected to reach 92,200 by 2030 with an annual growth rate of .0%. Water demand is expected to increase consistent with population growth.

The City currently provides service to the following connection types:

Connection Type	Count	Percent of Total
Residential	15,797	81%
Manufacturing/Industrial/Commercial	2,965	15%
Irrigation	781	4%
Total	19,543	100%

Land use within Palo Alto is predominantly single-family residential. Excluding dedicated open space, Palo Alto is almost completely developed. According to the City's 1998-2010 Comprehensive Plan, less than 1% of the City's land area consists of vacant, developable land. Future growth will occur primarily through infill and redevelopment. The impact of growth on the water system and increased demand has been addressed by the City in its Comprehensive Plan and the Urban Water Management Plan.

2. Infrastructure Needs and Deficiencies

The City's water system consists of the following components:

Facility	Quantity
Pipelines	226 Miles
Reservoirs (Tanks)	7
Total Water Storage Volume	12.93 MG
Pump Stations	5
Wells	5 standby and 3 new emergency wells
Total Well Pumping Capacity	NP
Pressure Zones	NP

NP – not provided

The water utility originated in 1896, two years after the City was incorporated. Water supply was exclusively groundwater until 1937 when the City signed a 20-year contract with the San Francisco Water Department (subsequently SFPUC). In 1962 another 20-year contract was signed with SFPUC to supply all water and existing City wells were placed in a standby condition. In 1999 the City conducted the Water Well Regional Storage and Distribution System Study; the report identified the risks of sole-source water supply and recommended a list of capital improvement projects including refurbishing the five existing wells and constructing three new wells. In 2000, the report was expanded to incorporate long-term goals to reduce dependence on SFPUC.

The City maintains five turnout locations for SFPUC water. The total capacity of all five turnouts is 40,400 gallons per minute. In 2003, SFPUC changed from chlorine to chloramines system-wide. Palo Alto was able to successfully implement the necessary system changes and provide public information and assistance.

As part of the analysis conducted for the City's groundwater storage and distribution system, the City identified the need to improve pressure and capacity in Pressure Area 2. The State Department of Health Services recommends an eight hour minimum emergency demand, in the event of a shutdown of the SFPUC aqueduct system. The water stored for the area is insufficient in volume and pressure to meet either maximum day demands or water flows to fight fires throughout Pressure Zone 2. Three new pumps will be installed at the Mayfield Pump Station to correct this situation. (Stanford University noted that it can provide backup emergency fire supply for the hospital in the event of inadequate pressure within Palo Alto's system.)

The City has completed extensive planning efforts related to its water service. The City has a Water Master Plan that was adopted in 1992 which provides the framework for system improvements and expansion.

Palo Alto has an extensive Capital Improvements Program that extends through 2009. A majority of planned projects involve upgrading the groundwater supply system. The projects identified include upgrading pressure reducing stations, pump stations, and providing water treatment facilities to begin utilizing groundwater as a continuous source of water.

The City has been keeping pace with a 25-year pipeline replacement program starting in 1993. By 2003, 33 of the original 75 miles of identified deficient mains will have been replaced, representing a 44% completion status, 40% through the program. Each year the projects are evaluated and the highest priority is given to the most deteriorated portions of the system.

Also included in the CIP are an ongoing meter and hydrant replacement program and continued development of a system-wide GIS database to complement the City's Capacity, Management, Operations and Maintenance (CMOM) program. This will provide a single source for information indexing and storage.

Water Demand

In 2000, the residential sector accounted for 62% of the total City water sales. The increase in residential demand over time has been consistent with population growth. Both the industrial and commercial sector demands decreased overall partly due to water conservation efforts and enforcement of the landscape irrigation ordinance.

Water conservation has been a primary focus of the City since the 1970's. Current water demands are greater than the 1992-3 drought years, but less than the mid 1980's; they have decreased 20-65% from 1975 to 1995 as a result of "permanent" water conservation measures.

Existing and build-out water demands for Palo Alto are as follows:

Demand	Quantity
Existing Average Annual Demand (2000)	14,500 AF/yr (2000 UWMP)
Existing Maximum Day Demand (2003/4)	98.76 AF/Day
Existing Peak Demand	NP
Build-Out Average Annual Demand (2020)	16,381 AF/Y (2000 UWMP)
Build-Out Maximum Day Demand	NP

** Based on Max Day Factor of 1.68 and minimum Build-out AAD; NP – not provided*

Water Supply

The following table lists current and contractual water supply:

Supply	Current Volume*	Maximum Available (Contractual)	Percent of Total
San Francisco Public Utility Commission	12.9 MGD	168.8 MGD	99.5%
Recycled Water	0.01 MGD		0.5%
Total	12.9 MGD	168.8 MGD	100.0%

The City depends solely on SFPUC for domestic water supply and has accelerated implementation of the recommendations in the 1999 study mentioned previously. The City has been proactive in working internally with alternative analysis and risk assessments related to a loss in SFPUC water, as well as working through BAWSCA to analyze the needs of the SFPUC system to improve reliability. The City is also researching available dry-year water transfers from other State Water Project contractors.

The City has five existing wells with a combined total rated capacity of 4,300 GPM. The wells were constructed nearly 50 years ago and are in need of major repair and upgrades if the City intends to rely on them for water, either as supplemental daily demand or emergency use. The water quality of the wells is also substandard and could only be used for emergency supply without treatment to reduce levels of iron, manganese and total dissolved solids. Well water is currently being treated by adding fluoride, chlorine and ammonia.

One of the policies included within the City's Comprehensive Plan 1998-2010 is to protect Palo Alto's groundwater from the adverse impacts of urban uses. To support this policy, the Plan includes a program to work with the Santa Clara Valley Water District to identify and map key groundwater recharge areas for use in land planning and permitting and the protection of groundwater resources. Most recharge is occurring naturally through rainfall.

Recycled water is available from the Palo Alto Regional Water Quality Control Plant, which the City operates.

The City is in the process of developing a Water Integrated Resource Plan (WIRP) that will evaluate all available supply alternatives. The alternatives examined include increased conservation, recycled water, connection to the SCVWD's treated water pipeline, and use of groundwater in droughts or on an ongoing basis. All alternatives were evaluated for cost, reliability and availability in droughts, enhancement to emergency preparedness, and water quality impacts. The City has determined that SFPUC supplies are adequate for normal years, but additional supplies are needed for drought. The WIRP guidelines were approved by the Council in 2004, and implementation will continue in the next year.

Water Storage

The City maintains six water storage tanks, totaling 10.5 million gallons. Five of the six tanks were constructed in the 1960's and are rated by the City as in excellent condition. The 4.0 MG in-ground Mayfield concrete tank was constructed in 1927 and is in good condition. The City is planning to construct a new 2.43 MG tank in the future. One of the capital projects to be funded in FY 2008-2009 includes the addition of seismic protection systems on the storage tanks to preserve potable water after a seismic event.

The City's current storage capacity is equal to 32% of maximum day demand, or 81% of their average day demand. Existing wells can provide supplemental water in the event of an emergency, but are not used on a regular basis to meet daily demands. Well water quality is also an issue. With the addition of 2.43 MG of water storage, the City will have storage capacity equivalent to one average day demand.

Summary

The City of Palo Alto is actively upgrading its water distribution system and has accelerated the implementation of recommendations included in the 1999 Water Wells, Regional Storage, and Distribution Study. The City is reliant on SFPUC for its domestic supply; however the improvements being implemented will broaden the sources of supply, increase reliability and reduce the City's risk in the event of a service interruption. The majority of planned Capital Improvement Projects involve upgrading the groundwater supply system. The projects identified include upgrading pressure reducing stations, pump stations, and providing water treatment facilities to begin utilizing groundwater as a continuous source of water, effectively supplementing SFPUC water and providing redundancy and backup supplies in the event of an emergency. The storage capacity of existing water tanks appears to be below average, but the City is planning to add a new tank. With the inclusion of a reliable groundwater supply system, the maximum safe yield of the wells will offset the need for additional above ground water storage in the future.

3. Financing Constraints and Opportunities

The City of Palo Alto operates the water utility as an enterprise activity. The following table summarizes the financial activity in the Water Fund for FY 2002-2003, per the audited statement of revenues, expenditures and reserves.

City of Palo Alto – Water Fund FY 2002-2003 Financial Summary			
Revenue -	Water Sales	$17,385,497	92%
	Other Revenue	$1,556,588	8%
	Total	$18,942,085	100%
Expenses -	Operations	$2,694,756	15%
	Water Purchases*	$6,029,860	34%
	CIP Projects	$1,959,956	11%
	Admin/Management	$1,597,515	9%
	Rent/Dep./Ins./Transfers/Other	$5,566,713	31%
	Total	$17,848,800	100%
Reserves		$6,700,000	35% of Revenue

** Purchases from SFPUC*

The last audit was conducted in October 2003. The City has financed utility capital improvements with bonds in the past and has an AAA credit rating. Current CIP expenditures are financed through user fees and are built into the water rate structure.

Per the adopted budget for FY 2004-2005, the City is projecting an ending balance in the Water Fund of $8.71 million and $63.51 million in the Capital Fund (as of June 30, 2005). The City has reserves for the following (projected as of June 30, 2005):

- Emergency Plant Replacement $1,204,000
- Rate Stabilization $6,728,000
- Debt Service $778,000

The minimum guideline level for Rate Stabilization is $7.1 million. The City has noted the shortfall and a portion of the current rates are designated to build this reserve.

For FY 2004-2005, efforts to control rate increases resulted in a reduction of capital project expenditures of $2.2 million. The City will continue to work towards completing these projects.

4. Cost Avoidance Opportunities

The City is avoiding costs related to water service on a number of levels. The 1999 Water Wells, Regional Storage and Distribution System Study was fundamental in providing the City with direction and recommendations on how to improve the system and decrease dependence on SFPUC. The City has also undertaken another study, the Preliminary Assessment of Water Resources Alternatives, to analyze all available water supplies. The Long Term Water Supply Study (2000), evaluated costs and operational issues relating to treatment of well water as a sole water supply. The Water Integrated Resource Plan includes cost analysis on water sources and system improvements, enabling the City to determine the most cost-effective approach for water service in normal and drought conditions.

The pipeline replacement project is evaluated annually and priorities are re-established to ensure that pipelines in the most deteriorated portions of the system are replaced first. The City uses a Supervisory Control and Data Acquisition System (SCADA) to manage water delivery and pressure. It also has a comprehensive Geographic Information System and has completed the transfer of all utility maps related to water, gas and wastewater systems from hard copies to digital.

5. Management Efficiencies

The City of Palo Alto is achieving management efficiencies for water service through the structure and functions of the Utilities Department. The water service utility is operated with the following staff:

Staff Type	Number
Management/Administrative	5
Operational	21
Professional/Support	14
Total	**40**

Utilities staff is shared across four enterprise utilities: electric, gas, water, and wastewater collection.

The City has a Utilities Strategic Performance Plan which is updated semi-annually. It is used to evaluate the City's utilities service in four areas: Customer & Community, Financial, Environment and People (Staff). Each of the areas has a supporting objective and key strategies. The performance update allows the City to identify areas of success as well as concern, and take corrective measures.

The City also achieves management efficiencies through its planning documents. The City adopted its Water Master Plan in 1992 and Urban Water Management Plan in 2000. The Urban Water Management Plan will be updated in 2005. The Water Integrated Resource Plan includes analysis for the efficient provision of service.

6. Shared Facilities

Palo Alto shares facilities where appropriate and where it will provide benefit to the City's water service utility. The City is a partner in the Water Reuse Program of the Palo Alto Regional Water Quality Control Plant (RWQCP). Program partners include: City of Los Altos, Mountain View, Palo Alto, East Palo Alto Sanitary District, and the Town of Los Altos Hills. The RWQCP is a Regional Wastewater Treatment Plant, established in 1980, and produces recycled water for golf courses, parks, and landscape irrigation.

The City also partners with the SCVWD on a water conservation program consisting of water use surveys, washing machine rebates, low flow toilets and showerhead aerators.

The City is a signatory to the California Urban Water Conservation Council's Memorandum of Understanding and currently implements six of the 14 Best Management Practices including:

BMP 3:	System Water Audits
BMP 4:	Meter Connection and Retrofit Existing
BMP 6:	High Efficiently Washing Machines
BMP 7:	Public Information Program
BMP 11:	Conservation Pricing
BMP 12:	Conservation Coordinator

The City has an emergency water intertie with Mountain View which is jointly owned and maintained to provide as-needed water to pass between agencies. Palo Alto also has a temporary intertie with the Purissima Hills County Water District.

7. Rate Restructuring

Supply Rates

The City is currently paying the following rates for its water supply:

SFPUC: Treated Water = $471.52/AF

The City is expecting water supply rates from SFPUC to continue to increase significantly over time, which will result in rate increases for its water customers. The City is working through BAWSCA on this issue.

Demand Rates

The City evaluates water rates annually with respect to expected costs. Rate levels are established to cover all costs associated with water service, including capital projects. The City charges for the commodity but does not charge a meter charge. It has a two-tier structure for residential use. Water rates were increased 10.3% effective January 1, 2005. Previous rate increases were 10.3% effective July 1, 2004 and 15% effective July 1, 2003. The City noted that increases were the result of a rise in CIP costs, the wholesale water rate increase enacted by the SFPUC and the need to replenish the Rate Stabilization Reserve.

The rate structure is divided into three categories: residential, non-residential and irrigation. Only residential customers have tiered rates depending on usage, effectively encouraging conservation. The first 7 hundred cubic feet (CCF) is charged at $3.707 per CCF; additional consumption is charged at $4.025 per CCF. Residential customers account for over 80% of the customer base, so there is not a significant need to tier other rate categories to encourage conservation.

For a standard residential customer using a ¾" meter and 500 gallons a day, or 20 CCF a month, the monthly bill would be $78.27 (7 @ $3.707 + 13@ $4.025 = $78.27).

Water usage charges comprise 92% of the total water fund revenue. User rates have increased by 35% in the past two years and there is an expected additional 25% increase over the next two years.

Many agencies currently importing water from SFPUC are well aware of the financial burden they will be faced with in 2009 when the contract renegotiations occur. In the case of Palo Alto, water purchases from SFPUC account for only 35% of total Water Fund expenses. Based on FY 2002-2003 financial information, the cost of water from SFPUC could double and the overall expenses to the City would only increase by 34%.

8. Government Structure Options

Palo Alto's Utilities Department uses the functions of other departments within the City to accomplish annual or specialty tasks. This provides an efficient use of available resources and allows the utility to maintain a smaller administrative and management staff. The Rate Department (Finance), Public Relations, Utility Marketing Services, Engineering, and Supply Resources are utilized for portions of the water service.

The City is providing water service to the area within its incorporated boundaries. No other government structure options were noted.

9. Local Accountability and Governance

Palo Alto's water utility is addressed by the City Council during Council meetings. The Council has nine members who are elected at large to serve staggered four-year terms. The Council meets on the second and third Tuesday of each month at 7:00 PM and at other times as needed. Meeting agendas are advertised the Friday prior to the meeting.

The City actively encourages community participation in the development of its Urban Water Management Planning efforts. The Utilities Advisory Commission (UAC) was formed in 1991 and provides advice to the utility staff and City Council. The UAC includes five members of the public who are appointed by the City Council.

The City prepared and published its annual 2003 Water Quality Report in June 2004. The report is available at the City and on the City's website.

The City provides a substantial amount of public information on water conservation and water reuse both published and online. The City has a website (www.city.palo-alto.ca.us) as does the Utilities Department (www.cpau.com).

– DETERMINATIONS –

1) Population and Growth

The City of Palo Alto currently has an estimated 59,000 residents, excluding Stanford University. ABAG is projecting the City's population to reach 92,200 by 2030, including the City and its Sphere of Influence.

The City has planned for growth and development through its Comprehensive Plan, Water Master Plan and Urban Water Management Plan.

2) Infrastructure Needs and Deficiencies

Palo Alto is actively working to reduce the City's dependence on the SFPUC water supply by rehabilitating existing groundwater wells and making improvements to the supply system to maximize groundwater usage.

Water storage capacity is currently substandard, but the City is planning to increase capacity through construction of a 2.4 MG storage tank. The rehabilitation of groundwater wells will effectively supplement above-ground storage.

Recycled water is provided by the Palo Alto Regional Water Quality Control Plant; the City is a partner in the Water Reuse Program.

The City plans for infrastructure needs through its Water Master Plan and CIP program.

3) Financing Constraints and Opportunities

Palo Alto operates its water utility as an enterprise activity, charging all related expenses to the fund including rent. The rate structure ensures funding for operational and maintenance needs, capital projects, and adequate reserves.

The City maintains reserves for Emergency Plant Replacement, Rate Stabilization, and Debt Service.

Efforts to control rate increases in FY 2004-2005 resulted in a reduction of capital project expenditures of $2.2 million.

4) Cost Avoidance Opportunities

The City is continuing to develop its GIS system to provide an efficient means of managing data system-wide.

Palo Alto uses a Supervisory Control and Data Acquisition (SCADA) system to manage the water delivery system.

As a City department, Palo Alto Utilities utilizes the functions of other departments within the City as needed to improve the cost efficiency of the water utility.

5) Management Efficiencies

The City has implemented a Utilities Strategic Performance Plan to evaluate the City's utilities service in four areas: Customer & Community, Financial, Environment and People (Staff). An update is prepared semiannually and reviewed by the Utilities Advisory Commission.

6) Shared Facilities

Palo Alto is a partner in the Water Reuse Program of the Regional Water Quality Control Plant.

Palo Alto is a member agency of BAWSCA and is a partner with the SCVWD for implementation of water conservation measures.

The City has a permanent water intertie with the City of Mountain View and a temporary intertie with the Purissima Hills County Water District that can provide water in emergencies.

7) Rate Restructuring

Palo Alto reviews its utility rates regularly. Water rates were adjusted three times in the past thirteen months: January 1, 2004, July 1, 2004 and January 1, 2005. Rates increased 35% in the past 2-years, and the City expects an additional 25% increase for the next two years. Water rates are established to cover operations and maintenance, capital project expenditures, debt service and maintain an adequate level of reserves.

The City uses a two-tiered rate structure for residential use to promote water conservation.

8) Government Structure Options

The water utility is operated by Palo Alto's Utilities Department. No other government structure options were noted.

9) Local Accountability and Governance

The City of Palo Alto has a process to ensure that local accountability and governance standards are met through the oversight and management provided by the City Council. The water utility is addressed during City Council meetings. The City provides a substantial amount of water conservation and recycling information to its residents.

The City has a five-member Utilities Advisory Commission. Commissioners are members of the public appointed by the City Council.

The Utilities Department maintains its own website with pertinent information related to water service.

F. SAN JOSE MUNICIPAL WATER SYSTEM

Overview

The City of San Jose is the largest city in Santa Clara County, extending from the San Francisco Bay in the north to Morgan Hill in the south. There are three major water purveyors providing water service within the City's incorporated area: the San Jose Water Company and the Great Oaks Water Company, both private companies, and the San Jose Municipal Water System (SJMWS). The SJMWS serves approximately 33.3 square miles in four separate areas of the City: North San Jose/Alviso, Evergreen, Edenvale, and Coyote. Water supply includes a combination of groundwater, imported water and recycled water. The City is a member agency of BAWSCA.

1. Growth and Population

The San Jose Municipal Water System's four service areas comprise approximately 10% of the City's total population and 12% of total land area. They also include 29% of the City's land available for development. The estimated population within the combined service areas was 95,000 in 2000 and is projected to reach 144,000 by 2020. This represents an annual growth rate of 2.6%, significantly higher than other the projected rate for other cities in Santa Clara County. The four service areas can be characterized as follows:

- North San Jose/Alviso: 3,378 acres bounded by the Alviso Slough to the north, Trimble Road to the south, Coyote Creek to the east and the Guadalupe River to the west. Land use is predominantly industrial with some residential/commercial. The area is approximately 74% developed and is expected to be fully built-out by 2010.
- Evergreen: 10,100 acres bounded by Hwy 101 on the west, the foothills of the Mount Diablo range on the east, Tully Road to the north, and City limits to the south. Land use is approximately 83% residential and 13% commercial. The area is approximately 70% developed.
- Edenvale: 600 acres of rural area east of Coyote Creek and south of Hellyer Avenue. The area is zoned for industrial use. It is currently only 10% developed and expected to be 70% developed by 2020.
- Coyote: 1,440 acres located west of Hwy 101, south of Tulare Hill, and north of Palm Avenue. It is zoned as campus industrial and currently undeveloped. The area is expected to be 50% developed by 2010.

The SJMWS currently provides service to the following connection types:

Connection Type	Count	Percent of Total
Residential	23,822	92%
Manufacturing/Industrial/Commercial	737	3%
Recycled	145	0.5%
Irrigation/Commercial/Public Agencies/Temporary	1,122	4.5%
Total	25,826	100%

The City uses a Greenline/Urban Growth Boundary in order to define the ultimate perimeter of urbanization. Land outside the Greenline/Urban Growth Boundary is intended to remain rural permanently and kept under the County's jurisdiction.

Coyote Valley will become a major new community within the City of San Jose over the next twenty years. The Coyote Valley Specific Plan (CVSP) area encompasses 7,000 acres of mostly undeveloped land between San Jose and Morgan Hill. 3,400 acres of the northern and central sections are envisioned as an integrated living and working environment with the remaining 3,600 acres remaining as a permanent non-urban buffer between San Jose and Morgan Hill.

The City of San Jose is the lead agency for this planning effort. All of the northern Coyote Valley area is within the city limits. The City intends to expand its Urban Service Area in order to annex the mid-Coyote area, an action which will require LAFCo approval. According to the Coyote Valley Specific Plan Progress Report No. 2, "The South Coyote Valley Greenbelt will remain outside San Jose's Urban Growth Boundary, and the City has no plans to extend urban services into this area nor annex existing unincorporated properties." This level of growth will significantly increase water demand, and require major infrastructure investments. Some water system projects have already been implemented in order to support other up-front infrastructure facilities such as the Metcalf Energy Center.

There is a dispute between San Jose Municipal Water and the Great Oaks Water Company over which agency should provide water service in the North Coyote area. Great Oaks has filed a law suit over this issue, which is currently in the discovery phase. The area in question includes the Metcalf Energy Center, a major new facility that will supply electricity to Coyote Valley. The plant is expected to go online in July, 2005. The SJMWS has constructed a 3.6 million gallon water storage tank as well as two new wells to serve the generating facility.

The City has made conservative projections on growth and water demand within each of its four service areas, in keeping with the City's General Plan. These projections were used for the City's 2001 Urban Water Management Plan as well as the upcoming Water Master Plan.

2. Infrastructure Needs and Deficiencies

The San Jose Municipal Water System service areas are not contiguous and therefore operate with separate systems and sources of water supply. The combined infrastructure of the SJMWS includes the following:

Facility	Quantity
Pipelines	325 miles
Reservoirs (Tanks)	17
Total Water Storage Volume	36.5 mg
Pump Stations	15
Wells	14
Total Well Pumping Capacity	26MGD
Pressure Zones	8

Water Supply

The SJMWS relies on treated surface water and groundwater for its potable supply. Groundwater accounts for approximately 3% of total supply and is primarily used in the Edenvale and Coyote areas. It serves as a backup supply for the North San Jose/Alviso and Evergreen areas. Treated water purchased from the SFPUC is used in the North San Jose/Alviso area. In the Evergreen area, treated water is supplied by the SCVWD. The following table lists the City's current and contractual water supply:

Supply	Current Volume	Maximum Available (Contractual)	Percent of Total
San Francisco Public Utilities Commission	1,685 MG	978 MG	24%
Santa Clara Valley Water District	5,064 MG	NP	73%
Groundwater Wells	210 MG	NA	3%
Total	6,958 MG		100%

NA – not applicable; NP – not provided

As noted above, the four SJMWS service areas are not interconnected and water availability in one area cannot necessarily be considered supply for the other three areas.

Recycled water is provided by South Bay Water Recycling, a program designed to provide a reliable, sustainable and drought-proof water supply to the South Bay area. This water is produced at the San Jose/Santa Clara Water Pollution Control Plant which treats wastewater from a 300 square mile area including San Jose, Santa Clara, Milpitas, Campbell, Cupertino, Los Gatos, Saratoga and Monte Sereno. The Plant is located in Alviso and has the capacity to treat 167 million gallons per day. Approximately 10% is treated to a tertiary level and sold for landscape, agricultural and industrial uses. The program is operated by the SJMWS. Recycled water use within the SJMWS service area has successfully replaced up to 7% of potable demand in areas where it is available.

Water Demand

The aggregated existing and build-out water demands for the four service areas of the SJMWS are as follows:

Demand	Quantity
Existing Average Annual Demand (2003/4)	19 MGD
Existing Maximum Day Demand (2003/4)	33.3 MGD
Existing Peak Demand (peak hour)	47.5 MGD
Build-Out Average Annual Demand (2020)	37 MGD
Build-Out Maximum Day Demand*	69 MGD

** Based on current max day peaking factor of 1.8*

The City is implementing all 14 demand management measures recommended by the California Urban Water Conservation Council to encourage water conservation and reduce water use.

Infrastructure Overview by Service Area

North San Jose/Alviso Service Area

The North San Jose/Alviso area receives water from the Hetch Hetchy system through two turnouts of the Hetch Hetchy Aqueduct. San Jose has a temporary, interruptible contract with SFPUC for up to 3,000 acre-feet per year (approximately 978 million gallons). The contract may be terminated by SFPUC with two years notice. There are four wells in the area capable of producing 5,600 gallons per minute. This can be used to supplement the imported supply if necessary. (No groundwater was used in 2003.) There are two storage tanks with a total capacity of 6 million gallons as well as two booster stations. The system pressure and capacity is adequate for domestic and fire protection service. The City has one emergency intertie in this area with the City of Santa Clara.

The SFPUC changed its water disinfectant from chlorine to chloramines in February 2004. This required some SJMWS system changes as well as public outreach. The change in water chemistry impacted dialysis patients as well as industrial users and biotechnology firms. The changeover occurred smoothly and no outstanding issues were noted.

Evergreen Service Area

The Evergreen service area primarily depends on treated, imported water supplied by the SCVWD. The water is imported through the State Water Project and the Central Valley Project and delivered to the area through three turnouts from the SCVWD system. The City has a three year contract with the SCVWD for deliveries with a provision for annual price adjustments. There are four wells in the area that are used to supplement imported supply, and the City noted that storage is more than adequate. The City has one emergency intertie in this area with the San Jose Water Company.

There is a concern about supply limitations in the Evergreen area. The City noted that groundwater production capacity plus storage does not equal the maximum day demand. The system is closely monitored during the summer to ensure system reliability and adequate pressure for customers and fire flow. Future growth is expected in the area as it is only approximately 70% developed. The City noted that it is unable to drill any new wells in the area and they are maximizing the available treated water.

Edenvale Service Area

The Edenvale service area relies entirely on groundwater for supply. There are three existing wells in the area with a capacity of 1,600 gallons per minute. A fourth well was constructed in 2004. This area is zoned for industrial use, which has the potential to have higher water demands than residential use. Future development will likely require infrastructure improvements to increase system capacity, but this is typically financed through development fees.

Coyote Service Area

The Coyote area is also dependent on groundwater. There are three wells in the area. One has a temporary capacity of 300 gallons per minute and is the main source of water. There are plans to complete pumping facilities for the other two wells in the future so that at build-out there will be three pumps with a combined capacity of 4,500 gallons per minute.

The current SJMWS Coyote service area boundaries include a portion of the future Coyote Valley community. When this community is developed, water demand will significantly increase. The SCVWD has a Central Valley Project turnout in the area for raw imported water, but there are currently no water treatment facilities. The Santa Teresa treatment plant is further north. The SJMWS recently constructed a 3.6 million gallon storage tank as well as two new wells in the North Coyote area to serve the new Metcalf Energy Center.

Summary

With the exception of the Evergreen area, the SJMWS has adequate supply to meet the current and projected demands for its service area provided that planned strategies are implemented by the SCVWD and SFPUC. These strategies include structural improvements to the Hetch Hetchy system, water banking, conservation measures and expansion of recycled water systems. The City is in the process of updating its Water System Master Plan and has an ongoing capital improvements program to address aging infrastructure and other infrastructure needs. The City noted that improving system security and maintaining funding levels for capital improvements will be some of the challenges it faces in the next few year

3. Financing Constraints and Opportunities

The San Jose Municipal Water System operates as an enterprise activity. The following table summarizes its financial activity for FY 2002-2003, as provided by the City.

San Jose Municipal Water System –FY 2002-2003 Financial Summary			
Revenue -	Water Sales/Service Charges	$17,538,000	96%
	Other Revenue – Interest	$691,000	4%
	Total	$18,229,000	100%
Expenses -	Operations		
	Water Purchases*	$13,099,000	81%
	CIP Projects	$3,032,000	19%
	Admin/Management		
	Dep./Ins./Transfers/Other		
	Total	$16,131,000	100%
Reserves		$12,172,000	67% of Revenue

** Purchases from SFPUC and SCVWD*

The SJMWS maintains reserves for both operations and capital improvements. At the end of FY 2003, approximately 65% of total reserves were for operations and 35% for capital needs. The SJMWS is required by ordinance to transfer funds to the City's General Fund for a prescribed Rate of Return and overhead costs. The Rate of Return is based on water revenues and other factors and has an annual cap of 8%.

The City has an AA+ credit rating by both Standard and Poor's and Fitch. There are no outstanding bonds for the water system. The last audit was completed by the Macias Group in June, 2003.

The SJMWS noted that increasing costs for wholesale water purchases and other operational expenses have become a financial constraint, particularly when coupled with the costs for capital improvements. The recent escalation in projected costs for the SFPUC Regional CIP will only exacerbate the situation as it is expected to further increase the wholesale water rates. The City is committed to stabilizing rates to the greatest extent possible and does not fully integrate annual cost increases into the retail rate structure. Therefore, the SJMWS must use reserves or reduce expenses elsewhere to cover the shortfall.

4. Cost Avoidance Opportunities

The San Jose Municipal Water System is actively utilizing cost avoidance and cost savings opportunities for its water service. For example, the SJMWS is automating a number of processes and incorporating the use of a Geographic Information System (GIS) to inventory pipelines and other infrastructure.

The SJMWS is also rehabilitating or replacing aging infrastructure. This includes a program for water main replacement which can be accelerated if necessary based on the number of breaks. Preventative maintenance and planned replacement are effective cost avoidance opportunities as they reduce the potential for more costly repairs in the future.

In January 2004, the South Bay Water Recycling program was reorganized and the management was transferred to the SJMWS. This has provided economies of scale and greater efficiency the SJMWS and the SBWR program.

Lastly, San Jose is a signatory to the California Urban Water Conservation Council's Memorandum of Understanding regarding urban water conservation and implements all 14 Best Management Practices through its partnership with SCVWD.

5. Management Efficiencies

The San Jose Municipal Water System operates with the following staff:

Staff Type	Number FTE's
Management/Administrative	3
Operational	13
Professional/Support	19
Total	35

The City uses planning documents to guide operations and system improvements. The SJMWS is in the process of updating its Water Master Plan. The Urban Water Management Plan was completed in 2000 and will be updated in 2005 as required by law.

The SJMWS is in the process of automating a number of systems, including the use of GIS and a computerized maintenance management system. Performance measurements are used to evaluate efficiency and cost effectiveness, and the results are reported to the City Council quarterly.

As mentioned above, the management of South Bay Water Recycling was recently transferred to the SJMWS during the reorganization of the program. The operational aspects of the recycling program are highly complementary to water operations and efficiency has increased due to synergy between the staff.

6. Shared Facilities

The San Jose Municipal Water System shares facilities where appropriate and beneficial to the City's water utility. It participates in water conservation programs sponsored by SCVWD consisting of several residential and commercial programs as well as public education efforts. The SJMWS also manages the South Bay Water Recycling program, which has multiple partners including the Cities of San Jose, Milpitas, and Santa Clara; five sanitation districts; the San Jose Water Company and the Great Oaks Water Company; the Santa Clara Valley Water District, and the US Bureau of Reclamation.

The SJMWS has emergency water interties with the City of Santa Clara in the North San Jose/Alviso area and the San Jose Water Company in the Evergreen area. These jointly-owned and maintained connections allow the agencies to share water as needed during emergencies or temporary service interruptions.

The SJMWS has a ten-year contract with the San Jose Water Company to provide emergency repair services. The City is a member of BAWSCA and actively participates in the regional coordination that the Agency provides.

7. Rate Restructuring

Supply Rates

The San Jose Municipal Water Service is currently paying the following rates for its water supply:

SFPUC: Treated Water = $479/AF

SCVWD: Treated Water = $495/AF, Groundwater = $405/AF

The SFPUC rate increased 25% from the prior year, and the SCVWD rate increased 9.5%. Rates for both SFPUC and SCVWD are expected to continue to increase significantly over time, which will result in rate increases for retail water customers. The City makes every effort to stabilize retail rates and has not directly passed on all cost increases in the past. It was noted that in recent years two public safety positions have been eliminated as a direct result of the increased cost for water service. The City sees this issue as one of its most significant challenges in the next few years and is actively working through BAWSCA and the SCVWD Water Retailers Group regarding a strategy to stabilize water rates.

Demand Rates

The San Jose Municipal Water Service uses a multi-tiered rate structure to encourage conservation. The structure also includes pricing by zone, with four price zones in the Evergreen service area, two in the North San Jose/Alviso area and a single zone in the other two areas. Customers also pay a meter service charge and a 5% utility tax. For a standard residential customer using a ¾" meter and 500 gallons a day (20 hundred cubic feet per month), the monthly cost would be as follows:

$6.00 meter charge + 7 @ $1.45 + 7 @ $1.67 + 6 @ $1.87 = $39.06

The SJMWS has increased rates 8% over the past two years and expects to increase them another 4% annually in the next two years. These consumer rate changes reflect the increased cost of wholesale water as well as general cost increases associated with utility operations and maintenance.

8. Government Structure Options

The San Jose Municipal Water Service is operated through the City's Environmental Services Department. Other City departments such as Finance, Legal, Planning and Fire provide related services. No other government structure options were noted.

9. Local Accountability and Governance

The San Jose Municipal Water Service provides information pertaining to water service, conservation and water recycling on its website (www.sanjoseca.gov). The City has prepared and published their annual 2003 Water Quality Report; there were no violations to report. The City also has an online customer

satisfaction survey that provides an opportunity for customers to provide feedback on their interactions with the SJMWS, City, and Environmental Services Department staff.

The SJMWS is addressed by the City Council during Council meetings. Council members are elected at large to serve staggered four-year terms. The 11-member Council generally meets every Tuesday at 1:30 PM. Public hearings are generally held every other Tuesday evening on the first and third Tuesdays of the month at 7:00 PM. Agendas and minutes are posted on the City website.

The City is meeting the required standards for local accountability and governance, with public notice of council meetings and actions.

– DETERMINATIONS –

1) Population and Growth

The San Jose Municipal Water System serves approximately 12% of San Jose's incorporated area including 10% of the City's population. Population within the water service area is expected to reach 144,000 by 2020.

The SJMWS has four distinct service areas: North San Jose/Alviso, Evergreen, Edenvale and Coyote.

The City has planned for growth and development through its General Plan and Urban Water Management Plan and is integrating the projections into its upcoming Water Master Plan.

2) Infrastructure Needs and Deficiencies

The San Jose Municipal Water System uses treated surface, ground and recycled water for its supply. Treated surface water is purchased from SFPUC for the northern reach of the service area; treated surface water from the SCVWD is used in the Evergreen area. The Edenvale and Coyote service areas rely on groundwater.

Water supply capacity is below SJMWS standards in the Evergreen area; groundwater production capacity and storage does not equal the maximum day demand and the system must be closely monitored in warmer months to ensure adequate service levels.

Recycled water supply is obtained from the San Jose/Santa Clara Water Pollution Control Plant; demand is increasing.

The SJMWS is upgrading its water delivery system through rehabilitation and replacement of aging facilities.

3) Financing Constraints and Opportunities

The San Jose Municipal Water System operates as an enterprise activity. Per ordinance, the SJMWS is required to reimburse the General Fund for overhead costs as well as a Rate of Return. The annual cap on the Rate of Return is set at 8% of revenues.

The SJMWS maintains reserves for both operations and capital expenditures.

4) Cost Avoidance Opportunities

The San Jose Municipal Water System is in the process of automating a number of processes and is including the use of Geographic Information System technology. This is expected to provide greater efficiency and result in future cost savings.

The SJMWS has an ongoing program for water main replacement, which will reduce the risk of more costly repairs in the future.

5) Management Efficiencies

The San Jose Municipal Water Service uses performance measurements to monitor efficiency. The results are reported quarterly to the City Council.

The SJMWS uses a computerized maintenance management system to monitor and plan for system maintenance. This increases operational efficiency and allows for coordinated preventative maintenance.

6) Shared Facilities

The City of San Jose is a member agency of BAWSCA and is a partner with SCVWD for implementation of water conservation measures. The City jointly operates several water turnout facilities and manages the South Bay Water Recycling program.

7) Rate Restructuring

The San Jose Municipal Water System uses a multi-tiered rate structure to promote water conservation. The rate structure is based on delivery zones, allowing the underlying costs for water acquisition, treatment and delivery in a given area to be included.

The expected increase in the cost of imported water from both SFPUC and SCVWD represents a significant challenge to the City in terms of moderating future rate increases.

San Jose reviews and adjusts water rates annually based on internal budget projections.

8) Government Structure Options

The San Jose Municipal Water System is operated through the Environmental Services Department. The SJMWS utilizes other departments within the City to accomplish such tasks as finance, planning, fire

protection, and information technology for operations. No other government structure options were noted.

9) Local Accountability and Governance

The City of San Jose ensures local accountability and governance standards are met through the oversight and management provided by the City Council. The San Jose Municipal Water System is addressed during City Council meetings. The City provides information on the water utility, water conservation and water recycling on its website and in printed form.

G. CITY OF SANTA CLARA

Overview

The City of Santa Clara (City), located in the northern portion of Santa Clara County, is bordered by the City of San Jose on the north, east and south, and the Cities of Sunnyvale and Cupertino on the west. The water system is managed by the City's Water Utility. The Water Utility serves 106,000 residents within its service area of 19.3 square miles. The water service area boundary is coterminous with the City's incorporated boundary. Land use in the northern portion of the City is predominantly commercial and industrial, while the southern portion is primarily residential.

1. Growth and Population

The current estimated population of the City of Santa Clara is 106,000 residents. ABAG estimates that the City's population is 108,700 in 2005 and will reach 142,100 by 2030 with an annual growth rate of 1.2%. Growth is expected to increase average annual water demands by approximately 1.5% per year. The City estimates that it is approximately 95% built-out and remaining growth is expected to occur primarily in the form of redevelopment.

The City currently provides water service to the following connection types:

Connection Type	Count	Percent of Total
Residential	20,680	83%
Manufacturing/Industrial/Commercial	3,748	15%
Recycled	159	0.7%
Other (Municipal)	328	1.3%
Total	24,915	100%

The City noted in its 2000-2010 General Plan that although it is essentially built-out, there is significant potential for development, redevelopment, and expansion. The highest increase in density is occurring north of the Bayshore Freeway in areas of commercial and industrial land use, where employee levels are reaching 140 employees per acre. Residential has the highest land use percentage in the City, followed by public facilities, which includes institutional, educational, parks and recreational, open space and transportation rights of way. The planned land uses within the City are as follows:

Land Use	Planned	
	Acreage	%
Mixed Use	504	4.1%
Residential	4,688	38.0%
Commercial	679	5.5%
Industrial	2,898	23.4%
Public Facilities	3,581	29.0%
Total	12,350	100.0%

The City has addressed the projected increase in population and related impact on water service through its 2000-2010 General Plan and 2000 Urban Water Management Plan.

2. Infrastructure Needs and Deficiencies

The City's water system is comprised of the following:

Facility	Quantity/Capacity
Pipelines	295 miles
Reservoirs (Tanks)	7
Total Water Storage Volume	83.7 AF (27.3 MG)
Pump Stations	3
Wells	27
Total Well Pumping Capacity	15,356 AFY (55.8 MGD)
Pressure Zones	4

Note: 15,356 AFY equates to 13.7 MGD which is close to current use but the total well pumping capacity, if all wells were run at maximum flow rate is 55.8 MGD.

The water distribution system is divided into four pressure zones. The difference in elevation between the highest and lowest ground elevations is only 165 feet which theoretically could be contained in a single pressure zone. But because of the various water supply locations and differences in land uses throughout the City, separate zones were established. Each zone is interconnected with pressure reducing/pressure sustaining stations to allow water to transfer between zones. Pressures throughout the City range from 42 psi to 87 psi, with a normal fluctuation of not more than 10 psi.

Santa Clara's Water Master Plan was completed in 2002 and identifies the need to fund replacement of aging water system infrastructure including pipes, tanks, and pumps. Capital expenditures were recommended to be doubled over the next ten years to meet the expected replacement needs. Nearly one half of the City's pipelines are over 50 years old and over 10 miles of pipe are approaching 100 years in age. The Master Plan recommends development of a *Strategic Infrastructure Replacement Plan* to replace only those portions of the water distribution system that represent the highest and most immediate need.

The City is experiencing one to two water line breaks per month on average. Water loss, or the amount that enters the system but is not delivered, is very low at 2.3%. The City is implementing a water line replacement plan to address the leakage. Water utility projects identified in the FY 2003-2004 Capital Improvements Program include distribution mains, wells and pumps, meter replacement, Agnews water supply improvements, and seismic retrofit for storage tanks. These projects have a total funding of $2.05 million.

Water Demand

In the 2002 Master Plan, ultimate demand (2015) was predicted at 32.3 MGD. The demand projection assumes continued water conservation and increased utilization of recycled water, which appears to be the scenario today. The majority of projects identified in the Master Plan involve construction of additional storage facilities.

The following table lists existing and build-out water demands:

Demand	Quantity
Existing Average Annual Demand (2003/4)	23.7 MGD
Existing Maximum Day Demand (2003/4)	35.5 MGD
Existing Peak Demand (2002 Master Plan)	42.6 MGD
Build-Out Average Annual Demand (2020)	33.0 MGD
Build-Out Maximum Day Demand *	21.7 MGD

** Based on Max Day Factor of 1.68 and minimum Build-out AAD*

Water Supply

Existing water supply is 59.6% groundwater, 31.6% treated surface water and 8.8% recycled water. Groundwater is obtained through 27 wells distributed throughout the City. Treated water is supplied from both SFPUC and the SCVWD through three connection points. The SCVWD serves the southern portion of the City and the SFPUC serves the northern portion. There are more groundwater wells in the central region of the city.

A branch of the SFPUC aqueduct from the Hetch-Hetchy Reservoir traverses the north portion of the City. The City has two turn-outs from this source with a combined capacity of 9,000 GPM. Pressure is adequate to avoid the need for additional pumping. This supply is temporary and interruptible. Interruption requires two years advance notice by the SFPUC.

Treated water from the SCVWD is received into the Santa Clara system near the Serra Water Storage Tank site near Stevens Creek Boulevard and I-280 in the southern portion of the City. The existing pipeline capacity limits the maximum flow to 4,000 gpm. Any increase would require re-pumping some of the water, modifications to the City's system, and expansion of the District's Rinconada Water Treatment Plant.

The City overlies the Santa Clara Valley Sub-basin aquifer. The long-term overdraft of this groundwater source caused serious land subsidence issues in the past. This issue is being addressed by the implementation of a groundwater recharge program carried out by the SCVWD. The City participates in this program through the groundwater pumping charges paid to the District. The continued success of this program depends on maintaining a balance between extraction and recharge volumes. The City's General Plan noted that the expected safe-yield for the Basin is between 137,000 and 169,000 acre feet,

and the City's likely allowable annual limit would be 24,600 acre feet. This is significantly less than the 62,500 acre feet per year that the City noted on the questionnaire. However, the SCVWD will be working with the groundwater retailers, including the City, to better estimate the basin's safe-yield as part of the 2005 Urban Water Management Plan efforts.

The City is an owner of the San Jose/Santa Clara Water Pollution Control Plant, a jointly operated facility that treats wastewater and provides recycled water to several cities in the vicinity. Santa Clara receives its recycled water from this source. Recycled water sales exceeded 2.1 MGD in 2004.

The SCVWD projections indicate as much as a 20% shortfall system-wide in the event of a multiple year drought similar to the 1986-1991 drought. Groundwater supply would be maximized in this event, but firm yield limits would still result in the need for water conservation.

For the supply provided by the SFPUC, the City would be subject to the terms of the Interim Water Supply Allocation Plan that was developed through BAWSCA.

Santa Clara's current and contractual water supply is as follows:

Supply	Current Volume 2003	Maximum Available (Contractual)	Percent of Total
San Francisco Public Utilities Commission	4.0 MGD	4.5 MGD*	12.9%
Santa Clara Valley Water District	3.7 MGD	5.7 MGD**	12.0%
Groundwater Wells	21.9 MGD	55.8 MGD	70.9%
Recycled Water	1.3 MGD	1.8 MGD***	4.2%
Total	30.9 MGD	67.8 MGD	100%

** Contractual through BAWSCA*
*** Physical limitations of pipeline*
**** By 2010*

Water Storage

The present total system storage capacity is 27.3 million gallons. The City calculates their required water storage volume as a combination of operational storage, emergency storage and fire flow storage. Operational storage provides for daily fluctuation of water demands within a zone and provides for operational flexibility. No clear relation to daily fluctuation of demands appears to be used to determine the required operational storage. The City determined that 33% of the total storage of four of their existing tanks would be sufficient, totaling 4.5 MG. Emergency storage quantity was based on a "generally accepted capacity" of 50% of the Maximum Day Demand (MDD). Therefore, based on an existing MDD of 35.5 MGD, emergency storage would be 17.75 MG.

Fire flow storage is the amount of water required to provide a specified fire flow for a specified duration. The City utilized the ISO method to derive a general guideline of 3,500 GPM for a 3 hour period. When calculating the required fire flow, the City uses two concurrent fire flow demands for a total of 1.26 MG. Based on their methods of calculation, the 27.3 MG storage capacity exceeds the estimated storage needs of 23.45 MG. In addition, groundwater may be utilized as supplementary storage during an emergency event. The available water may be calculated based on the difference of average demand and peak pumping capacity of the well pump. Because above ground water storage capacity meets their needs, a detailed analysis of available emergency or fire flow water from their existing groundwater supplies was not conducted.

The fire flow and duration are also used within a hydraulic model of the City's water distribution system to determine areas that need improvements to maintain a minimum 20 PSI pressure residual during a fire flow event.

Summary

The City of Santa Clara appears to have adequate supply to meet the current and projected demands for its service area given the ongoing emphasis on conservation and increased use of recycled water. Groundwater comprises the majority of supply; the remainder is treated water purchased from the two major wholesale agencies. The City has adequate storage capacity for current demand, although demand increases due to growth may require additional storage facilities in the future. The City's Capital Improvements Program addresses aging infrastructure and other system needs.

3. Financing Constraints and Opportunities

The City of Santa Clara's Water Utility is operated as an enterprise activity. The following table summarizes the financial activity in the Water Utility Fund for FY 2002-2003, per the Comprehensive Annual Financial Report prepared by the City.

City of Santa Clara – Water Utility Fund FY 2002-2003 Financial Summary			
Revenue -	Water Sales	$17,452,000	91%
	Other Revenue	$1,668,888	9%
	Total	$19,120,000	100%
Expenses -	Personnel, Operations***	$4,073,926	23.1%
	Water Purchases*	$8,373,871	47.6%
	To General Fund****	$858,586	4.9%
	Internal Services**	$1,243,414	7.1%
	Operational Subtotal	$14,549,797	82.7%
	CIP Projects	$3,042,000	17.3%
	Total Expenses	$17,591,797	100%
Reserves		$10,604,000	55.5% of Revenue

** Purchases from SFPUC and SCVWD, plus $555,000 groundwater pumping cost*
*** $614,000 for financial management program*
**** Operations, materials, salaries, benefits, capital outlay*
***** 5% of Gross revenue transferred as part of "Contribution in lieu of taxes" program*

The City has no outstanding loans related to water service. CIP projects are funded on a "pay-as-you-go" schedule, so that adequate funding is accumulated prior to project implementation. The City did not provide information on its current credit rating.

Since the Water Utility typically does not finance capital expenses, they utilize reserves as a rate stabilizer on an annual basis. Due to the economic downturn that has occurred over the past several years, non-residential water demand has dropped, resulting in lower revenues. As a result, reserves have been utilized to reduce the impact to customers while rates have been steadily increased by 8% each year. Over the long term, the Water Utility does not consider this use of reserves as an issue since they will continue to increase rates to eventually catch up with expenses.

The State's budget act of 2004 included a number of changes on how local revenues are allocated. The City of Santa Clara will likely be impacted by the $350 million aggregate contribution required for cities for FYs 2004-2004 and 2005-2006. Although the water utility is operated as an enterprise activity, the overall fiscal impact to the City may affect the Water Utility.

4. Cost Avoidance Opportunities

The City identified several cost avoidance techniques incorporated into their water service. They utilize variable frequency drive (VFD) pumps for some of their well and booster pumps. By utilizing VFD's, the pumps only operate at a rate necessary to keep up with demand. For the overall distribution system, the City has built in a high level of redundancy through multiple sources of water. Therefore they can effectively avoid significant cost implications that could arise in the event of a delivery failure of any one

of their sources. While the Water Utility does not get reduced power rates during off peak period, as one of the largest electricity users in the City, the Water Utility fills its storage tanks during off peak periods to lessen the electricity demand loading on the City's Electric Utility. The City also employs engineers that produce in-house designs for improvements. City construction crews are capable of providing much of the infrastructure and rehabilitation construction work, effectively saving the added expense of advertising, awarding, contracting, and managing a construction contract. Overhead and profit associated with construction contracting is also averted by using City crews.

5. Management Efficiencies

The City's Water Utility operates with the following staff:

Staff Type	Number FTE's
Management/Administrative	1.5
Operational	36
Professional/Support	6
Total	43.5

The Operations staff has established a service goal of a 30-minute emergency response time. In 2003 the City received approximately 1,700 service calls related to water service, ranging from billing questions to service complaints. The most common service complaint was milky water. The City estimated that less than 200 calls were related to this issue. In all cases, the milky water was due to entrapped air bubbles in the groundwater which easily clears if the water is left to stand.

Turnover in senior level staff is seen as a significant challenge for the Department in the near term. The Department is investing in a methods and records knowledge base to enhance staff capabilities and efficiency.

The City is achieving management efficiencies through its planning efforts. Its Urban Water Management Plan was completed in 2000 and will be updated in 2005. The latest Water Master Plan was completed in 2002.

6. Shared Facilities

Santa Clara shares facilities with both the SCVWD and neighboring cities. The City participates in water conservation programs sponsored by SCVWD including water use surveys, washing machine rebates, low flow toilets and showerhead aerators.

The City has emergency water interties with the San Jose Water Company, California Water Service Company, and the Cities of Sunnyvale and San Jose. These jointly owned and maintained connections provide as-needed emergency water to pass between agencies.

The City of Santa Clara is also a joint owner and operator of the San Jose/Santa Clara Water Pollution Control Plant. The treatment plant produces tertiary treated non-potable water for landscape irrigation and certain industrial uses.

7. Rate Restructuring

Supply Rates

The City is currently paying the following rates for its water supply:

SCVWD: Treated water = $495/AF, Groundwater = $405/AF

SFPUC: Treated water = $509/AF (including meter charges)

As with other agencies receiving imported water, the City is expecting water supply rates from both wholesalers to continue to increase significantly over time. These rate increases, and having to pass the additional costs through to the customers, are seen by the City as one of its most significant challenges.

Demand Rates

Water rates are based on water usage with a minimum monthly meter rate, varying by meter size. The unit cost for water is a combination of a $0.65 per hundred cubic foot (CCF) monthly quantity charge, plus a $1.093 per CCF water and energy cost adjustment charge. This adjustment covers the costs associated with water purchases and energy for pumping. The total cost per CCF is $1.743. There is a minimum monthly charge which varies by meter size from $5.60 for a 5/8-inch meter to $427.90 for a 12-inch meter. Rates for service to meters served outside the city limits are adjusted by 1.5 times the standard rate. Agricultural users receive a $0.26 credit per CCF.

For a standard residential customer using a ¾" meter and 500 gallons a day, or 20 units a month, the monthly bill would be 20 @ $1.743 = $34.86.

Rates are reviewed and adjusted annually to cover budgeted costs, including water purchases, maintenance and operations, and CIP projects. The FY 2004-2005 adopted budget includes an 8% increase in rates. Rates are expected to increase an additional 8% over the next two years.

8. Government Structure Options

Santa Clara's water utility is operated by the City's Water and Sewer Utilities. Other City departments provide related services, such as fleet management, finance, legal, planning and fire protection. No other government structure options were noted.

The City's water service boundaries are coterminous with the incorporated area boundaries.

9. Local Accountability and Governance

Santa Clara provides information pertaining to water service on its website (www.ci.santa-clara.ca.us). Topics include water conservation and water reuse. The City prepared and published their annual 2003

Water Quality Report in June 2004. The report is available at the City and on their website. The City's annual financial reports and budgets are also posted on the website.

The water utility is addressed by the City Council during Council meetings. Council members are elected at large to serve staggered four-year terms. The Council meets at least twice per month on Tuesdays at 7:00 PM. The public is noticed through the city calendar, website and citywide cable channel.

The City is meeting the acceptable standards for local accountability and governance, with public notice of council meetings and actions and water service information.

– DETERMINATIONS –

1) Population and Growth

The City of Santa Clara estimates that its population is currently 106,000; ABAG is estimates that the City's population in 2005 is 108,700 and will reach 142,100 by 2030, with an annual growth rate of 1.2%.

The City has planned for growth and development through its General Plan, Water Master Plan and Urban Water Management Plan.

2) Infrastructure Needs and Deficiencies

Santa Clara relies primarily on groundwater obtained from 27 wells distributed throughout the City.

The City purchases treated water from SFPUC and SCVWD for its remaining supply. Recycled water is supplied from the San Jose/Santa Clara Water Pollution Control Plant.

The City's water storage capacity is adequate to meet current operational, emergency and fire flow storage needs.

The City's water system infrastructure is aging; the City is addressing the needs through its 2002 Water Master Plan and its CIP plan.

3) Financing Constraints and Opportunities

Santa Clara operates its water utility as an enterprise activity and it is intended to be self-supporting through user service charges.

Capital improvements are made on a "pay as you go" basis with no outside financing or loans.

The changes to local revenue allocation included in the State's budget act of 2004 may fiscally impact the City, including the water utility. 5% of gross revenues are transferred to the General Fund as part of the contribution in lieu of property taxes program.

4) Cost Avoidance Opportunities

Santa Clara is avoiding costs through a number of methods, including technology and equipment, staffing capabilities, and redundancy in water sources.

Some of the CIP projects pertain to replacements, upgrades and modifications to improve existing facilities, effectively resulting in preventative maintenance and potential cost avoidance in the event of a failure.

5) Management Efficiencies

The Water and Sewer Utilities manages the water utility in conjunction with the sewer utility, effectively utilizing staff.

Expected turnover in senior level staff is seen as a significant challenge by the Department in the near term.

6) Shared Facilities

Santa Clara is a member agency of BAWSCA and is a partner with SCVWD for implementation of water conservation measures. The City jointly operates several water intertie facilities and is a joint owner of the San Jose/Santa Clara Water Pollution Control Plant.

7) Rate Restructuring

The City of Santa Clara adjusts its water rates annually based on internal budget projections.

The expected increase in the cost of imported water from both SFPUC and SCVWD represents a significant challenge to the City in terms of moderating future rate increases.

8) Government Structure Options

The water utility is a division of the City of Santa Clara's Water and Sewer Utilities. The Division utilizes other departments within the City to accomplish such tasks as fleet management, finance, planning, and fire protection for operation of the utility. No other government structure options were noted.

9) Local Accountability and Governance

The City of Santa Clara ensures that local accountability and governance standards are met through the oversight and management provided by the City Council. The water utility is addressed during City Council meetings. The City provides a substantial amount of information related to water service, water conservation and water reuse to its water utility customers.

H. CITY OF SUNNYVALE

Overview

The City of Sunnyvale is located in northern Santa Clara County between the cities of Mountain View and Santa Clara. The water system is managed by the City's Public Works Department. Sunnyvale provides water to 131,760 residents within a service area that encompasses 24 square miles. California Water Service (Cal Water), a private water purveyor, serves approximately twelve small areas within the City's boundaries. Sunnyvale obtains its water supply from four sources: groundwater, SFPUC, SCVWD and recycled water from the Sunnyvale Water Pollution Control Plant. The City is a member agency of BAWSCA.

1. Growth and Population

According to the 2000 U.S. Census, Sunnyvale has a population of 131,760 residents. ABAG estimates the City's population at 133,000 in 2005, reaching 159,100 in 2030 with an annual growth rate of 0.8%. According to the City's 1997 Land Use and Transportation Element of the General Plan, approximately 96% of the parcels in the City are developed. Future development will include infill, redevelopment, and intensification of existing land use in designated areas. Of the 265 acres that were vacant in 1997, 17% were zoned for residential use, 78% for industrial, and 4% for commercial and 1% for public and quasi public use. The General Plan notes that the City has "taken actions to ensure that development is within existing service capacity".

The City currently provides service to the following connection types:

Connection Type	Count	Percent of Total
Residential	24,587	90%
Manufacturing/Industrial/Commercial	1,904	7%
Irrigation/Agriculture	767	3%
Recycled	89	<1%
Total	27,347	100%

Water Resources are specifically addressed in the 1996 Environmental Management Element of the City's General Plan. There are four primary goals for supply and distribution:

1. Goal 3.1A: Ensure potable water is available in sufficient quantity and pressure to meet the City's existing and future demands, and respond to emergency conditions.
2. Goal 3.1B: Develop a comprehensive water conservation plan.
3. Goal 3.1C: Maintain financially stable water fund through a user based fee system.
4. Goal 3.1D: Ensure potable water meets all quality and health standards.

Each of these goals has specific policies and actions associated with it. The intent is to ensure that growth and development within the City occur in conjunction with adequate supply and water system capacity.

The City has addressed the impact on water service from growth and the projected increase in population in its General Plan, 1999 Water Master Plan and 2000 Urban Water Management Plan.

2. Infrastructure Needs and Deficiencies

The City's water system is comprised of the following components:

Facility	Quantity
Pipelines	280 miles
Reservoirs (Tanks)	10
Total Water Storage Volume	84.4 AF (27.5 MG)
Pump Stations	5 (21 pumps)
Wells	9
Total Well Pumping Capacity	9 MGD
Pressure Zones	3 (40-105 psi)

The City adopted its Water Master Plan in 1999, which provides for system improvements based on projected growth and increased demand. The City budgets for infrastructure needs on a two-year budget cycle. As of December 2004, the City had $2.7 million budgeted for active capital improvement projects for numerous water projects, including security upgrades for wells and reservoirs, replacement of pipes, manholes and laterals, pump repairs, and replacement of obsolete Supervisory Control and Data Acquisition (SCADA) system hardware and software. The SCADA system will improve monitoring of water pressures and flows throughout the system.

Aging infrastructure is a concern. City staff estimated 14 water pipeline breaks in FY 2002-2003, although actual records of pipeline breaks or leaks were unavailable. The City's goal is to replace approximately two miles of pipe per year.

The City noted that there are pockets within the downtown region that do not meet current fire flow requirements. These pockets have been identified and near-term CIP projects setup to correct the problem areas. One of the projects listed in the CIP is the Downtown Water Line Engineering Study that will determine the conditions and appropriate line size to service redevelopment.

The California Water Service Company (Cal Water), a private purveyor, provides service to approximately twelve service area pockets within the City's boundaries. Service in these non-contiguous areas stems from Cal Water's acquisition of four water companies within the Los Altos area dating back to 1931. Some of those service areas include portions of Sunnyvale.

The City has emergency water pipeline interties with Mountain View, Cupertino, Santa Clara, and Cal Water. The City noted that improving water supply redundancy, perhaps through the construction of new groundwater wells, was a priority.

Water Demands

Existing and build-out water demands for Sunnyvale are as follows:

Demand	Quantity
Existing Average Annual Demand (2003/4)	22.6 MGD
Existing Maximum Day Demand (2003/4)	29.0 MGD (89 AF/Day)
Existing Peak Demand	NP
Build-Out Average Annual Demand (2020)	25.25 MGD (28,208 Af/Yr)[1]
Build-Out Maximum Day Demand	32.4 MGD*

** Based on current max day peaking factor of 1.28*

In FY 2001-2002, residential customers accounted for 90% of the 28,923 service connections and 58% of the total water demand. Using the same percentages for FY 2002-2003, residential demand equals 13.1 MGD, or 533 gallons per day per residential connection.

Water Supply

Sunnyvale's current and contractual water supply is as follows:

Supply	Current Volume*	Maximum Available (Contractual)	Percent of Total
San Francisco Public Utility Commission	9.1 MGD	15 MGD**	40%
Santa Clara Valley Water District	11.0 MGD	17 MGD	48%
Groundwater Wells (1,521 AF/Yr)	1.32 MGD	9.5 MGD	6%
Recycled Water	1.38 MGD	1.8 MGD	6%
Total	22.8 MGD	43.3 MGD (141 AF/Day)	100%

** Based on 2002/2003 Actuals*
*** 16,800 AF/yr (UWMP Chapter 3)*

Groundwater is a critical source of supply for the City, supplementing treated surface water. The City operates nine wells dispersed throughout its service area. Groundwater quality is good, and the water meets all drinking water standards without any treatment requirements. Total available supply for all wells is 9.5 MGD. The wells are used to maintain pressure within the system during peak demands and emergencies. They could provide up to 40% of the supply, but due to SCVWD pump taxes and energy costs, it is more cost effective for the City to maximize use of treated water.

Imported water from SFPUC comes from six delivery points located along the SFPUC Bay Division transmission pipeline, which runs through the northern part of the City. In May 2005 SFPUC is planning

[1] City of Sunnyvale, 2000 Urban Water Management Plan. Appendix B.

to replace its existing fluoridation station on the San Francisco Peninsula with a new system-wide fluoridation facility at its water treatment plant in the East Bay. With this change, Sunnyvale will be receiving fluoridated water from SFPUC. However, the SCVWD and groundwater supplies are not fluoridated, which will create inconsistencies in the water supply. The City recently authorized funding for a study to analyze the impacts of SFPUC fluoridation on the City. The results should help the City determine which residents are served by each source, the cost to fluoridate all water, and the issues and costs associated with not fluoridating SCVWD and groundwater supplies.

Sunnyvale serves the southern portion of its service area with treated water from the SCVWD. The supply comes through the West Valley transmission main from the Rinconada Treatment Plant located in Los Gatos. Sunnyvale maintains two points of connection to the main.

Recycled water is produced at the Sunnyvale Water Pollution Control Plant. Currently, the recycled distribution infrastructure is only in the northern portion of the City. Through FY 2003-2004, the City has invested $20.2 million in the water reuse system. The phase completed in FY 2003-2004 included a storage tank and increased production capacity to 2 million gallons per day.

Water Storage

Current water storage is 27.5 MG, which can supply up to 1.3 days of average daily demand. This could be considered low on average but existing groundwater wells provide supplemental supply for peak demands and emergencies. The City identified tank repairs and retrofits as a priority as all ten of their existing storage tanks are over 30 years old.

Summary

Sunnyvale obtains its water supply from several sources, including imported and groundwater. The City has adequate supply to meet current and projected demand, provided imported water continues to be available at current levels. The City's Water Master Plan, Capital Improvements Program and Projects Budget address system improvements, aging infrastructure and other system needs.

3. Financing Constraints and Opportunities

The City of Sunnyvale finances its Water Supply and Distribution utility through user fees. As mentioned earlier, one of the goals included in the Water Resources section of the City's General Plan is to "maintain a financially stable water fund through a user based fee system." The related policies include establishing a rate structure that ensures funding of capital improvements, operational and maintenance needs, and the development of an adequate reserve. The following table summarizes the financial activity in the Water Supply and Distribution Fund for FY 2002-2003, per the City's posted budget for FY 2004-2005.

City of Sunnyvale – Water Supply and Distribution Fund FY 2002-2003 Financial Summary			
Revenue -	Water Sales	$16,619,506	88%
	Other Revenue	$2,271,289	12%
	Total	$18,890,795	100%
Expenses -	Operations	$4,640,193	24%
	Water Purchases*	$11,188,934	57%
	CIP Projects	$397,856	2%
	Admin/Management	$24,661	0%
	Dep./Ins./Transfers/Other	$3,418,397	17%
	Total	$19,670,041	100%
Reserves		$4,231,291	22% of Revenue

** Purchases from SFPUC and SCVWD*

The City has designated reserves for debt service (27%); contingencies (59%), rate stabilization (14%), and a 20-year resource allocation plan (0%). The City has developed a 20-year budget, and has projected revenues and expenditures through FY 2023-2024.

The City of Sunnyvale uses bonds to finance major infrastructure projects. The City has a AAA bond rating. There are six outstanding bond issues for combined water, wastewater and other public works infrastructure improvement projects.

The City noted in its *Projects Budget Guide* for FY 2004-2005 that the City faced a budget crisis in FY 2003-2004 that required immediate action to address budget shortfalls. It also noted that, "As the budget for FY 2004-2005 was prepared, the City's financial position worsened, resulting in an additional budget shortfall." The outcome was that unfunded projects were not re-evaluated for funding in FY 2004-2005.

The State's budget act of 2004 significantly changed how local revenues are allocated. Cities within California will be required to contribute to the State's General Fund in both FY 2004-2005 and 2005-2006. Sunnyvale's estimated contribution in the first year is approximately $2.05 million. The impact of this reduction in revenue will likely be felt across all affected city departments, including Public Works.

The City is addressing this financial situation directly; the impact may delay water projects. However, the planning has been completed, and the projects may be considered for funding in the future when the financial situation improves.

4. Cost Avoidance Opportunities

The City is actively pursuing cost avoidance opportunities for various aspects of the water delivery process. The use of a Supervisory Control and Data Acquisition system (SCADA) is a significant cost avoidance measure as it allows operators to monitor pressures and water flow, and identify potential problems within the system before they elevate to emergency status.

The City maintains a Geographic Information System (GIS) database of the water system to effectively inventory assets, track maintenance orders, perform hydraulic modeling, and provide a means of indexing recorded improvement plans.

In terms of personnel, when highly technical design or engineering is necessary, the City hires consultants on an as-need basis. This allows the City to maintain a lower number of full-time staff, avoiding personnel costs during slower production times.

The Public Works Department utilizes the services of other City departments to offset costs related to finance, communications, legal, planning and fleet management.

5. Management Efficiencies

The Water and Sewer Utilities Department operates with the following staff:

Staff Type	Number FTE's
Management/Administrative	NP
Operational	NP
Professional/Support	NP
Total	28

NP – not provided

The City adopted its Water Master Plan in 1999 and Urban Water Management Plan in 2000. Both plans will be updated in 2005.

The City of Sunnyvale uses a Performance Budget which correlates to the elements of the General Plan. Rather than a traditional line-item budget, this approach places the emphasis on planning and budgeting for the accomplishment of service objectives. It includes evaluation measures such as objectives, performance indicators, and measurable activities and tasks. This methodology allows the Public Works Department to achieve management efficiencies through detailed evaluation of the water utility's performance, both in service and cost.

The Department tracked 364 complaints in 2003; however the breakdown by type of complaint was not available. The response, time and cost to resolve complaints are all evaluated in the Performance Budget.

6. Shared Facilities

The City of Sunnyvale regularly shares facilities with other agencies in order to reduce costs and improve efficiencies. The City participates in the recycled water rebate program with SCVWD as well as the District's water conservation program. Water department staff often attends safety training courses in conjunction with other agencies.

The City noted that there would be benefit from more joint planning for new well construction. A study with SCVWD for "regional" wells for emergency storage was also considered to have merit.

The Water utility shares facilities with the City's Wastewater utility. Recycled water is produced at the Donald M. Somers Water Pollution Control Plant, utilizing tertiary level wastewater treatment. The water is currently being used for landscaping purposes in the northern third of the City, reducing demand for potable water.

Sunnyvale is a signatory to the California Urban Water Conservation Council's Memorandum of Understanding regarding urban water conservation and implements all 14 Best Management Practices through the partnership with SCVWD. It is also a member of BAWSCA, utilizing the structure and functions of that agency to manage the imported water supply from SFPUC.

The City has water interties with Mountain View, Cupertino, Santa Clara and the California Water Service Company. These jointly owned and maintained interties provide as-needed emergency water to pass between agencies.

7. Rate Restructuring

Supply Rates

The City is currently paying the following rates for its water supply:

SFPUC: Treated Water = $471.52/AF

SCVWD: Treated Water = $412.33/AF, Groundwater = $439.38/AF

The City is expecting water supply rates from SFPUC and SCVWD to continue to increase significantly over time, which will result in rate increases for its water customers. The City sees this as one of its most significant challenges in the next few years.

Demand Rates

Sunnyvale uses an inverted rate structure for water sales, which serves as a demand management measure for water conservation. Rates are reviewed annually and adjusted as necessary based on expected cost increases. The City does have reserves designated for rate stabilization. The long-term financial plan for the City indicates an expected user rate increase of 5 to 7% annually through 2010.

Rates are established based on account type and include the following: Apartments, Residential, Commercial/Industrial/Fire Line/New Construction, Landscape, and Agricultural/Institutional. Landscape users pay the highest rate at $2.1298 per hundred cubic feet (CCF) for all water drawn for landscape uses. Reclaimed water is sold at $1.9181 per CCF for landscape use and $0.9106 per CCF for agricultural and institutional use. Customers are also charged a water service fee or meter charge. Water delivered outside City boundaries is sold at three times the normal rate, except recycled water. (No out-of-area service was noted.)

For a standard residential customer using a ¾" meter and 500 gallons a day, or 20 CCF per month, the monthly bill would be $33.51 water fee + $3.86 service fee = $37.37.

The last formal rate study was conducted in 2000. The next scheduled rate study will be in FY 2004-2005, as part of a cost of service study.

8. Government Structure Options

The City of Sunnyvale operates its water utility through the Public Works Department. Other City departments such as field services, fleet management, communications, IT (GIS), legal, finance, community development, fire and planning provide related services.

The City's water service boundaries are coterminous with the boundaries of the City's incorporated area.

No other government structure options were noted.

9. Local Accountability and Governance

Sunnyvale provides information related to its water service on the City's website (www.ci.sunnyvale.ca.us). The City published its annual 2003 Water Quality Report in June 2004. The report is available at the Public Works office. The City's annual financial reports and budgets are also posted on the website.

The water utility is addressed by the City Council during Council meetings. Council members are elected at large to serve staggered four-year terms. The Council meets each Tuesday at 7:30 PM. Meeting notices are posted in the City's offices as well as on the website.

The City is meeting the acceptable standards for local accountability and governance, with public notice of council meetings and actions as well as water service information.

– DETERMINATIONS –

1) Population and Growth

Sunnyvale has a population of 131,760 per the 2000 U.S. Census. ABAG estimates the City's population at 133,000 in 2005, reaching 159,100 in 2030 with an annual growth rate of 0.8%.

The City is primarily built out; future growth will occur through infill, redevelopment, and intensification of existing land use in designated areas

The City has planned for growth and development through its General Plan, Water Master Plan and Urban Water Management Plan.

2) Infrastructure Needs and Deficiencies

Sunnyvale relies primarily on imported water obtained from SFPUC and SCVWD for its supply. Nine groundwater wells provide a supplementary source.

Recycled water is produced at the Sunnyvale Water Pollution Control Plant; the water is available to customers in the northern portion of the City.

The City plans for infrastructure needs through its Water Master Plan and CIP program. As of December 2004, the CIP has $2.7 million budgeted for active water projects.

Water storage capacity is adequate per industry standards; however, the storage facilities are over 30 years old and maintenance and repairs will be a priority.

3) Financing Constraints and Opportunities

Sunnyvale finances its water utility through user fees; the rate structure ensures funding for capital improvements, operational and maintenance needs, and the development of an adequate reserve.

The City has designated reserves for debt service, contingencies, rate stabilization and a 20-year resource allocation plan.

The City uses a 20-year timeframe for budgeting, which provides the benefits of long-term financial planning.

The City is currently facing a budget crisis that may impact the water utility.

4) Cost Avoidance Opportunities

Sunnyvale avoids costs related to water supply and distribution through the use of technology (SCADA system and GIS).

The City actively pursues cost avoidance measures including demand management and the use of long-term financial planning.

5) Management Efficiencies

Sunnyvale uses a Performance Budget which correlates to the elements of the General Plan. The evaluation measures that are included provide a means for the City to achieve management efficiencies both in cost and service levels.

6) Shared Facilities

Sunnyvale is a member agency of BAWSCA and is a partner with SCVWD for implementation of water conservation measures.

The Water Service and Distribution utility delivers recycled water produced at the Sunnyvale Water Pollution Control Plant.

The City has several water interties with surrounding agencies that can provide water in emergencies.

7) Rate Restructuring

Sunnyvale uses an inverted rate structure to promote water conservation.

The expected increase in the cost of imported water from both SFPUC and SCVWD represents a significant challenge to the City in terms of moderating future rate increases.

Sunnyvale adjusts rates annually based on internal budget projections.

8) Government Structure Options

The water utility is operated by Sunnyvale's Public Works Department. The water utility utilizes other departments within the City to accomplish such tasks as finance, planning, fire protection, and information technology for operation of the utility. No other government structure options were noted.

9) Local Accountability and Governance

The City of Sunnyvale ensures that local accountability and governance standards are met through the oversight and management provided by the City Council. The water utility is addressed during City Council meetings. The City provides a substantial amount of water conservation and recycling information to its residents.

4. PRIVATE WATER PURVEYORS

California Water Service Company

Great Oaks Water Company

San Jose Water Company

Stanford University

West San Martin Water Works, Inc.

A. CALIFORNIA WATER SERVICE COMPANY

Overview

The California Water Service Company (Cal Water) is a private company based in San Jose which provides water service in numerous locations throughout California. The Company's Los Altos-Suburban District serves Los Altos and the vicinity. Cal Water is the largest investor-owned water utility in the western United States and is a subsidiary of the California Water Service Group. Within its Los Altos-Suburban District, Cal Water serves 17,807 connections. The source of supply includes both groundwater and treated surface water provided by the SCVWD. Cal Water operates under the oversight and authority of the California Public Utilities Commission (CPUC).

The California Water Service Company is a private entity and is not subject to LAFCo purview; therefore no determinations have been included. Cal Water is included in the report to ensure a comprehensive review of water service in Santa Clara County.

1. Growth and Population

Cal Water currently provides service to the following connections within its Los Altos-Suburban District:

Connection Type	Count	Percent of Total
Residential	16,500	93%
Commercial/Manufacturing/Industrial	7	0%
Other – Governmental	1,300	7%
Total	17,807	100%

Little growth is expected within this service area over the next twenty years. ABAG's projected annual growth rate for Los Altos is 0.2%.

2. Infrastructure Needs and Deficiencies

Cal Water provides both groundwater and treated local surface water within the Los Altos-Suburban service area. The water system is comprised of the following:

Facility	Quantity
Pipelines	293+
Reservoirs (Tanks)	47
Total Water Storage Volume	14.7 MG
Pump Stations	NP
Wells	28
Total Well Pumping Capacity	1,444.5 MG
Pressure Zones	18

The Company operates under the authority of the CPUC, which sets standards for system capacity and service reliability.

Water Supply

Cal Water's supply includes groundwater (28%) and treated water purchased from the SCVWD (72%). Data provided by the SCVWD indicated that the Company had 4,459 acre feet of groundwater production in 2003. The Company has no treatment facilities. Groundwater management and recharge is performed by the SCVWD.

Recycled water is not available within the Company's service area.

3. Financing Constraints and Opportunities

Cal Water declined to provide proprietary financial information for this review as the service area data is commingled with all other Cal Water operations. The Company did note that the CIP for the Los Altos-Suburban District is $1.8 million.

4. Cost Avoidance Opportunities

No information was provided.

5. Management Efficiencies

Cal Water has over 800 employees and has established management practices in order to increase efficiency and maximize profits. The Company is investor-owned and must meet certain levels of performance per investor expectations.

6. Shared Facilities

No information was provided.

7. Rate Restructuring

Supply Rates

The Company pays a groundwater pump tax to the SCVWD to cover the costs associated with the District's groundwater recharge program. The Company pays a different rate for treated water, as follows:

SCVWD: Pump Tax = $435/AF
SCVWD Treated = $460/AF

Demand Rates

Cal Water must receive approval from the CPUC for any rate changes. The Company increased rates 8% in the last two years, and expects to increase them another 10% over the next two years. The current rates went into effect on January 12, 2004. For comparison purposes, a ¾" meter and 20 CCF of water use would result in the following charge:

$14.70 meter + 20 CCF @ $1.9319 = $53.34

8. Government Structure Options

The California Water Service Company is a private entity. Water service is provided to parcels within the Los Altos-Suburban District service area that has been approved by the CPUC. No government structure options were noted.

9. Local Accountability and Governance

The California Water Service Company is a private entity operated under the direction of a Board of Directors. Directors are elected by majority vote of outstanding shareholders. Cal Water maintains a website to provide information to its customers (www.calwater.org).

B. GREAT OAKS WATER COMPANY

Overview

The Great Oaks Water Company, formed in the early 1960's, provides retail water service to four areas: Blossom Valley, Santa Teresa, Edenvale and Coyote Valley. 99.8% of the Company's revenue is derived from service within San Jose's incorporated area. The Company uses groundwater as its sole source of supply. Great Oaks is a private company and operates under the oversight of the California Public Utilities Commission (CPUC).

The Great Oaks Water Company is not subject to LAFCo purview, and accordingly no determinations are included. Great Oaks is included in the report to ensure a comprehensive review of water service in Santa Clara County. The Great Oaks Water Company declined to participate in the service review. The information included was obtained from public information sources and data provided to the Santa Clara Valley Water District.

1. Growth and Population

The Great Oaks Water Company serves an estimated population of 70,963. Its service area includes portions of San Jose that are projected to have moderate to high growth, particularly in the Coyote Valley area. The Company provides service to the following connections:

Connection Type	Count	Percent of Total
Commercial (including domestic)	19,935	99%
Industrial	47	0%
Public Authorities	156	1%
Schools	32	0%
Total	20,170	100%

Company data indicates that 20 new connections were added in 2003. Growth within the Great Oaks service area is addressed by the SCVWD in its long-range planning documents and Capital Improvement Plan.

2. Infrastructure Summary

The Great Oaks Water Company relies solely on groundwater for its water supply. The Great Oaks water system consists of the following:

Facility	Quantity
Pipelines	185 miles
Reservoirs (Tanks)	6
Total Water Storage Volume	6.23 MG
Wells	15
Total Well Pumping Capacity	21,925 GPM

The Company is required to adhere to the standards adopted by the CPUC for system condition and capacity to ensure adequate levels of service for domestic use as well as fire flow. Total water use for 2003 was reported at 12,792 acre-feet.

There is a dispute between the Great Oaks Water Company and San Jose Municipal Water System over which purveyor should provide water service in the North Coyote area. Great Oaks has filed a law suit over this issue, which is currently in the discovery phase. The area in question includes the Metcalf Energy Center, a major new facility that will supply electricity to Coyote Valley. The plant is expected to go online in July, 2005.

3. Management Efficiencies

The Great Oaks Water Company operates with 16 staff members.

4. Rate Summary

Supply Rates

The Great Oaks Water Company is a retail customer of the SCVWD. It pays a groundwater pumping tax of $405 per acre foot.

Demand Rates

The Company's current water rates include a readiness to serve charge (meter charge) as well as a usage charge. The rate structure has one flat rate based on volume; the permanent rate is $1.409 per hundred cubic feet and there is also a temporary surcharge of $0.196 yielding a combined rate of $1.605. The reason for the surcharge was not identified. Any proposed rate changes must be submitted to the CPUC for approval. For comparison to other water agencies, a typical demand of 20 hundred cubic feet (CCF) has been used throughout this report. Using 20 CCF and a ¾" meter, the monthly bill for a customer of the Great Oaks Water Company would be as follows:

$5.25 meter chg + 20 CCF @ $1.605 = $37.35

5. Local Accountability

The Great Oaks Water Company maintains a website with some company information for its customers (www.greatoakswater.com).

C. SAN JOSE WATER COMPANY

Overview

The San Jose Water Company (SJWC) is the largest private water provider in Santa Clara County serving an area that encompasses 138 square miles. The SJWC provides potable water service to portions of Cupertino, San Jose, and Santa Clara; all of Campbell, Los Gatos, Saratoga, and Monte Sereno; and contiguous territory in the County of Santa Clara. As a private water utility, the Company operates under the authority of the California Public Utilities Commission (CPUC).

The San Jose Water Company is a private entity and not subject to LAFCo purview; therefore no determinations have been included. The company is included in the report to ensure a comprehensive review of water service in Santa Clara County.

1. Growth and Population

The San Jose Water Company serves an estimated population of 1 million. Growth within the service area is expected to be slow to moderate; ABAG's annual growth rate projections are as follows: Campbell (0.4%), Cupertino (1.0%), Los Gatos (0.4%), Monte Sereno (0.8%), Saratoga (0.5%), and San Jose (0.9%). The combined population within these areas is expected to reach 1.3 million in 2025, although the Company only serves a portion of the entire area. The highest level of growth is projected in Cupertino and San Jose. The Company serves the following connections:

Connection Type	Count	Percent of Total
Residential	215,029	99%
Commercial/Manufacturing/Industrial	91	0%
Other – Governmental	1,955	1%
Recycled	40	0%
Total	217,115	100%

The SJWC adds approximately 1,200 new connections each year. The Company relies on the SCVWD to manage future supply based on projected growth. The Company has planned for growth within its service area through its Urban Water Management Plan, Infrastructure Master Plan, and Capital Improvement Plan.

2. Infrastructure Needs and Deficiencies

The SJWC water system is comprised of the following:

Facility	Quantity
Pipelines	2,475 miles
Reservoirs and Tanks	R = 5 T = 82
Total Water Storage Volume	7,110 AF
Pump Stations	217 (428 MGD)
Wells	99
Total Well Pumping Capacity	233 MG
Pressure Zones	65

The company operates under the authority of the CPUC, which sets standards for system capacity and service reliability.

The SJWC has developed an Infrastructure Master Plan for Pipelines and Special Facilities. Related to that is the Company's five-year Capital Improvement Plan. Over $1 million in improvements are in process for its collection and distribution facilities, primarily to improve fire flow capacity. There are areas within the SJWC service area that currently do not meet fire flow standards, primarily due to prior planning approvals that waived some water system requirements. The Company is actively working to improve this situation whenever there is an opportunity to upgrade pipeline capacity.

The SJWC disinfects groundwater at the well-head and has two treatment facilities for surface water (Montevina and Saratoga). One uses a direct filtration process and the other microfiltration, with a combined capacity of 35 million gallons per day. The facilities are in very good to excellent shape. The smaller plant was built in 1993 on the site of a former plant that had been taken out of service. The larger facility has recently undergone major capital improvements.

The Company's wells are all rated in good to excellent condition with no contaminant issues with the exception of one well that has some nitrate issues. The SJWC is able to manage this through time of use and dilution. The water storage facilities include steel and redwood tanks as well as open distribution reservoirs and raw water reservoirs. These facilities are all rated in good condition.

In 1997 the SJWC was awarded a 25-year lease to operate the City of Cupertino's Water Distribution System. The system needs and demand have been factored into the Company's planning efforts.

Water Demand

The following table lists existing and build-out water demands:

Demand	Quantity
Existing Average Annual Demand (2003/4)	138.0 MGD
Existing Maximum Day Demand (2003/4)	232.6 MGD
Build-Out Average Annual Demand (2020)	
Build-Out Maximum Day Demand *	390.1 MGD

The SJWC has a water conservation program and dedicated conservation staff. It uses a number of Demand Management Measures in order to encourage water conservation.

Water Supply

The SJWC obtains its water supply from several sources: groundwater (34%), surface supply (12%), and treated surface water from the SCVWD (54%). The SJWC is the SCVWD's largest customer, purchasing over 50% of the District's treated supply. The SJWC receives water from all three of the SCVWD's treatment plants.

Local surface supply is the most cost-effective water source for the SJWC as there is no cost for supply, only collection, treatment and distribution. The SJWC holds water rights on several local creeks and impounds raw water at the following lakes: Cozzens, Elsman, Kittredge, McKenzie, and Williams.

Groundwater is extracted from the Santa Clara Valley Basin, which receives natural and artificial recharge through the SCVWD's facilities. The District manages all of the groundwater resources and is responsible for all recharge functions.

The SJWC offers recycled water through South Bay Water Recycling; the water is produced at the San Jose/Santa Clara Water Pollution Control Plant in Alviso and is available in the northern and eastern portions of the SJWC's service area.

3. Financing Constraints and Opportunities

Revenue for the SJWC is derived from service charges. The following is the Company's financial summary:

San Jose Water Company – FY 2002-2003 Financial Summary			
Revenue -	Service Charges	$149.7 million	100%
Expenses -	Expenses	$126.8 million	
	Capital Improvements	$28.7 million	

The SJWC undergoes an annual independent audit conducted by KPMG, LLP. The results of the 2003 audit were not qualified in any way. The Company has outstanding bonds of $130 million; all are rated NAIC 1 (National Association of Insurance Companies).

4. Cost Avoidance Opportunities

The San Jose Water Company is avoiding costs through efficient management operations, maximizing the use of its water resources and being actively involved in water-related issues in the County. The Company provides leadership in the SCVWD water retailers group as well as the group's financial subcommittee.

The SJWC uses technology extensively to manage its system, resulting in lower staff levels, controlled energy costs, and improved security monitoring. For its system, the Company uses a fifth generation Supervisory Control and Data Acquisition (SCADA) system that enables staff to efficiently manage pressure, flow and energy use, as well as monitor for system problems before they become critical. The Company noted that it has comprehensive cost/connection controls to ensure maximum cost-effectiveness.

In addition, the SJWC is a partner in South Bay Water Recycling, along with the San Jose Municipal Water System, the Cities of Milpitas and Santa Clara, the Great Oaks Water Company, the SCVWD and the US Bureau of Reclamation. This partnership provides coordination with the retailers to ensure that the area's recycled water resource is maximized, both in terms of delivery and plant treatment capacity.

5. Management Efficiencies

The San Jose Water Company is operating with the following staff:

Staff Type	Number FTE's
Management/Administrative	24
Operational	165
Professional/Support	112
Total	301

The SJWC purchased a Computerized Maintenance Management System in 2004, which is expected to improve efficiency and reduce future repair costs. The Company has established management practices in order to increase efficiency and maximize profits. It is investor-owned and must meet certain levels of performance based on investor expectations.

6. Shared Facilities

The SJWC shares facilities where appropriate to increase efficiency and improve cost effectiveness. The Company has two intertie connections with the SCVWD at Quito Road and Cox Avenue to improve reliability for SCVWD retailers receiving water from the Rinconada Treatment Plant through the West Pipeline.

The Company also wholesales water to 35 water mutuals and other small water systems. It sells water to the Aldercroft Heights County Water District directly from Los Gatos Creek where the Company holds water rights.

7. Rate Restructuring

Supply Rates

The SJWC pays a groundwater pump tax to the SCVWD to cover the costs associated with the District's groundwater recharge program. The Company also pays a treated water rate for imported supply:

SCVWD Pump Tax = $435/AF
SCVWD Treated = $460/AF

Demand Rates

The San Jose Water Company reviews rates annually; any rate changes must be approved by the CPUC. The Company increased rates 3.5% in 2002, another 7.1% in 2003, and 7.56% in 2004. It is expected that rate increases will continue. The projected rate increase for 2005 was 2.5%.

The SJWC has a flat rate structure that includes a meter charge and water usage. In addition, there is 1.4% surcharge on all customer bills to recover the cost of the fee imposed by the CPUC to fund their regulation. For comparison purposes, a ¾" meter and 20 hundred cubic feet of water use would result in the following charge:

$9.37 meter + 20 CCF @ $1.8314 + 1.4% surcharge = $46.64

8. Government Structure Options

The San Jose Water Company is a private entity. Water service is provided to parcels within a service area that has been approved by the CPUC. No government structure options were noted.

9. Local Accountability and Governance

The San Jose Water Company is a private entity operated under the direction of a 10-member Board of Directors. Directors are elected by the shareholders to one-year terms. The SJWC maintains a website to provide information to its customers (www.sjwater.com).

D. STANFORD UNIVERSITY

Overview

Stanford University is a private institution located in the northern portion of Santa Clara County; the University owns land in six jurisdictions. Water service is provided by the Water Department within the Stanford University Utilities Division. The University relies on imported water from SFPUC for its domestic supply; groundwater provides a backup domestic supply. Surface water collected in two lakes is used for irrigation and some fire suppression. Stanford serves an estimated population of 24,700; it supplies a variety of academic facilities including housing, classrooms, laboratories, the Central Energy Facility and athletic facilities. The University is a member of BAWSCA.

As a private entity, Stanford University is not subject to LAFCo purview and no determinations have been included. The University is included in the report to ensure a comprehensive review of water service in Santa Clara County.

1. Growth and Population

Stanford University owns 8,180 acres that lie within six jurisdictions. The lands are comprised of the following:

Santa Clara County:	Unincorporated	4,017 acres	50%
	Palo Alto	1,161 acres	14%
San Mateo County:	Unincorporated	2,701 acres	33%
	Woodside	114 acres	1%
	Menlo Park	111 acres	1%
	Portola Valley	76 acres	1%

The land uses within Santa Clara County include academic, open space and agriculture. Portions of Stanford lands are within the City of Palo Alto's Urban Service Area and Sphere of Influence. However, due to the nature of the University, the rules, regulations and policy agreements relating to Urban Service Areas are applied differently to Stanford than for other areas in the County. Land uses within the City of Palo Alto include the Stanford University Medical Center, Stanford Shopping Center, Stanford Research Park, and apartment complexes.

Almost all development is concentrated in the central campus, with the foothills remaining essentially undeveloped. The University, the County of Santa Clara and the City of Palo Alto have entered into an agreement that addresses land use, planning and annexation for Stanford. The *1985 Land Use Policy Agreement* sets forth the policies regarding land use, annexation, planning and development of Stanford lands in Santa Clara County. It also defines what uses may remain in unincorporated area and what uses must be annexed to the City of Palo Alto.

The University operates under a General Use Permit, which provides general approval for a specified amount of development at Stanford. In 2000, the University applied for a new General Use Permit and

requested approval for an additional 2,035,000 square feet of building area and 2,350 housing units on campus through 2010 (as well as 668 housing units for faculty and staff). As a part of the permit application, the University developed the Stanford Community Plan that specifically addresses land use policies on Stanford lands in unincorporated County areas. The Plan emphasizes two principles: 1) compact and efficient urban development, and 2) conservation of natural resources.

Unlike other agencies that may count residential dwelling units or commercial buildings, the University measures development by the square footage of building area. As of the Year 2000 the University had 12.3 million square feet of building area. Annual average development since 1989 has been 177,450 additional gross square feet, with 76% for academic, athletic and support facilities, and 24% for student housing.[2] The actual building rate has slowed through 2010. As a condition of approval, the Stanford Community Plan/General Use Permit/Environmental Impact Report established a mitigation monitoring and reporting program that required Stanford to demonstrate that it can feasibly mitigate the impact from an increase in water consumption due to Stanford's land use and development activity. As a result, the *Stanford University Water Conservation, Reuse and Recycling Master Plan* was developed and adopted in 2003.

Similar to Urban Growth Boundaries for cities, the University is subject to an Academic Growth Boundary (AGB) as defined in the Community Plan. All development must occur within the AGB with lands outside remaining in open space, with limited development. The AGB has been established for a period of twenty-five years and any change would require a four-fifths majority vote of the County Board of Supervisors.

The University Water Department currently serves an estimated population of 24,700. Population in 2030 is expected to be 27,924 which represents an average annual growth rate of 0.5%. Stanford currently provides service to the following connections:

Connection Type	Count	Percent of Total
Domestic	1,414	100%
Irrigation/Agriculture	2	
Total	1,416	100%

It should be noted that the number of connections is not a clear indication of service levels as it is with other municipal water agencies. Typical campus housing is multi-family rather than single-family, and the service connection types include laboratory/research, energy facilities, and athletic facilities.

The University is operating under a General Use Permit that acknowledges there will be additional growth on the campus through 2010 as compared to the University's historic growth rate. However, this

[2] Stanford Community Plan. Growth and Development.

growth will be concentrated within the AGB that has been established in the Stanford Community Plan. The University has addressed the impacts of growth on water supply and infrastructure through its planning process.

2. Infrastructure Needs and Deficiencies

Stanford University's water system infrastructure is comprised of the following:

Facility	Quantity
Pipelines	145 miles (Domestic)
Reservoirs (2 domestic, 2 nonpotable	2 (+ 2 lakes)
Total Water Storage Volume (domestic + nonpotable)	1,385 AF (451.2 MG)
Pump Stations	4 (domestic water)
Wells	5
Total Well Pumping Capacity	(500gpm * 4 wells; 1 well @1200gpm) = 4.6MGD
Pressure Zones	3

The majority of the University's domestic system was installed in the 1960s, but some components date back to the 1930s. All four storage facilities were rated in good to very good condition. The system is efficient with only 6.6% of water unaccounted for due to leaks, etc. (The industry goal is under 10% as set by the American Water Works Association). The Water Department carries out an annual flushing and maintenance program to prevent water quality problems and leakage. All water connections are metered and usage is tracked with a metering database.

Stanford does not have any treatment facilities, except fluoridation on site. Imported, pre-disinfected water is purchased for domestic use; all wells except one produce groundwater that meets domestic water quality standards and can be provided without any additional treatment. Surface water is filtered.

The University has two emergency interties. One is for the Stanford University hospital in Palo Alto; Palo Alto has inadequate pressure at times and the University could provide water for fire suppression if needed. The second intertie is for domestic water and is located on Sand Hill Road on the northern edge of the campus.

Stanford has two lakes which collect non-potable surface water and serve as storage for irrigation and fire suppression. A third lake is located on the west side of the campus in an area that is suitable for groundwater recharge. The lake is not regularly filled, but the University uses this facility to recharge groundwater as a condition of its General Use Permit. In FY 2002-2003, 2.3 million gallons were recharged. To date, Stanford has not received credit from SCVWD for any recharge activity.

Rather than a Capital Improvements Program, the University has a Utilities Improvement Program (UIP) which is evaluated annually; this includes the water system as well as other utilities. The information is tracked electronically so that preventative maintenance tasks can be scheduled.

Water Demand

The following table lists existing and projected water demands without conservation:

Demand	Quantity
Existing Average Annual Demand (2004)	2.5 MGD
Existing Maximum Day Demand (2003/4)	
Existing Peak Demand	4.2 MGD
Build-Out Average Annual Demand (2010)	3.6 MGD
Build-Out Maximum Day Demand	

The University supplies water for a number of uses. Where feasible, external water demand is met by the surface water stored in the lakes rather than domestic supply. The following table represents the indoor (internal) and outdoor (external) water use patterns for the primary categories:

Demand Type	Internal Water Use (%)	External Water Use (%)
Student Housing	70	30
Faculty/Staff Housing	40	60
Academic	80	20
Athletics	45	55
Construction Projects	0	100
Leased Commercial Spaces	50	50
Medical School	75	25
Central Energy Facility	100	0

The University has been able to save over 100 million gallons through aggressive conservation efforts. This includes technology, system upgrades, and landscape irrigation and design requirements that maximize water use efficiency. The *Stanford University Water Conservation, Reuse and Recycling Master Plan* was adopted in October 2003. This document provides the framework for future conservation efforts and building requirements for new construction under the current General Use Permit. These efforts have enabled the University to effectively manage demand.

Water Supply

Stanford relies on pre-treated water imported through SFPUC for its domestic supply. Groundwater provides an emergency backup supply for domestic and backup supply for irrigation. Surface water, stored in the University's two lakes, is used for irrigation and fire suppression. The University's supply volumes are as follows:

Supply	Current Volume	Maximum Available (Contractual)	Percent of Total
San Francisco Public Utility Commission	2.5 MGD	3.03 MGD	100%

Stanford receives its supply of pre-treated water from the SFPUC through two turnouts on the western portion of the campus and one on the eastern side. The water is fluoridated at the turnouts. In 2003, SFPUC changed its disinfection process from chlorine to chloramines to comply with changes in the US EPA regulations. Some homeowners, and research projects in particular, have a high degree of sensitivity to changes in water chemistry. The University spent a significant amount of time preparing for this changeover, including working with researchers, plumbers and homeowners. The successful migration to chloraminated water was viewed as a significant accomplishment for the Water Department.

Groundwater from four of the University's wells meets domestic water quality standards, and it is used as emergency domestic supply. The fifth well has naturally occurring manganese that exceeds acceptable levels so it is used as a standby domestic well and for irrigation.

The surface water stored in the two lakes is delivered by a separate piping system. The water does not meet domestic water quality standards and would require treatment, so it is used for irrigation and fire suppression.

Recycled water is not currently used by Stanford; however the University is conducting a feasibility study to evaluate sources, supply and demand. Water could be provided by the City of Palo Alto Regional Water Quality Control Plant. Preliminary analysis indicates that it may become a viable option when water quality and cost-effectiveness improve. Currently, the opportunity to reuse water from the Central Energy Facility cooling tower and Heat Recovery Steam Generator for landscape irrigation is also being considered.

Water Storage

Current domestic water storage is 8.2 MG, which can supply up to 3.2 days of average daily demand. This is considered adequate by industry standards. In addition, four of the groundwater wells that meet domestic water quality standards can serve as an additional source of supply in emergencies.

Summary

Stanford uses water from several sources to meet demands. It obtains its domestic supply from the SFPUC. Groundwater is used for emergency domestic supply and irrigation; surface water is used for irrigation and some fire suppression. The water system is actively managed for maintenance and necessary improvements; water storage is adequate for current demand levels. The University is engaged

in an aggressive water conservation program that effectively manages demand. The University addresses infrastructure needs through its planning process.

3. Financing Constraints and Opportunities

The water service provided by Stanford University is funded through user charges; however the financing is accounted for primarily through internal accounting. The charge-out rates are set annually to be within 5% of the water system's actual expenditures.

The University did not provide any financial data for this review. However it was noted on the questionnaire that the Utilities Division did undergo an internal audit in 2002 and audit results were not qualified in any way.

Stanford has a AAA credit rating from Standard and Poor's. Water system capital costs are included with all other utilities and building capital projects in establishing bond packages.

The Utilities Division has experienced a significant budget cut back within the past two years, which has limited staffing and some maintenance programs. However, water service is essential to the academic mission of the University. Water service financing is evaluated annually during the budgeting process.

The cost of water supply reliability versus quality is an ongoing concern for Stanford. Increasing water costs are factored into the University's budget; unlike other agencies, the revenues from water service do not necessarily come from outside sources. Increasing water costs must be absorbed or compensated by other University revenues.

4. Cost Avoidance Opportunities

Stanford actively pursues cost avoidance opportunities related to the provision of water service. As noted previously, the University has developed the *Water Conservation, Reuse and Recycling Master Plan* which contains a detailed conservation plan and demand management measures to be used in conjunction with development. It also participates in the Water Efficient Technology program sponsored by SCVWD, earning a $35,000 rebate in FY 2003-2004.

The Utilities Division meters all water use so that water demand can be tracked and charge rates established at the appropriate level. Cost savings are also realized through the use of functions provided by other departments within the Utilities Division. Similar to other agencies, increasing regulatory requirements and the associated costs for administration are an ongoing concern.

Stanford is a member of BAWSCA, utilizing the structure and functions of that agency to manage the imported water supply from SFPUC.

5. Management Efficiencies

The water system within the Utilities Division is managed by the following staff:

Staff Type	Number FTE's
Management/Administrative	1
Operational	3
Professional/Support	4
Total	11

Consultants are used on an as-needed basis and a certified laboratory is used for water quality analyses.

In addition to the Utilities Improvement Plan and the Water Conservation Plan, the University has adopted an Emergency Response Plan which will increase efficiency in the event of an emergency. The Water Department is also achieving management efficiencies through its inclusion in the structure of the Utilities Division.

6. Shared Facilities

Stanford University shares facilities where appropriate with other agencies in order to reduce costs and improve efficiencies. Stanford is a party to the *1985 Land Use Policy Agreement* with the City of Palo Alto and Santa Clara County. This agreement allows for increased coordination and planning with the other jurisdictions.

The University is a member of BAWSCA, sharing the functions of that agency with other water retailers that purchase water from SFPUC. It also participates in the Water Efficient Technology program sponsored by the SCVWD as a part of its conservation efforts.

The Water Department also shares facilities within the Utilities Division with other campus utilities.

7. Rate Restructuring

Stanford's water rates are established annually based on projected water system expenditures.

Supply Rates

The University is currently paying the following 2005 rates for its water supply:

SFPUC: Treated Water = $492/ac-ft

SCVWD: Groundwater Pump Tax = $405 ac-ft

SFPUC rates have increased 25% in the two year period from FY 2002 to 2004; the SCVWD groundwater pumping tax has increased 14% in the same period. The University is expecting water supply rates from SFPUC and SCVWD to continue to increase significantly over time, which will result

in rate increases for its water service. The cost of water supply reliability versus quality is an ongoing concern for Stanford.

Demand Rates

Stanford charges a flat rate for water delivered through its system. The charge out rate in FY 2004 is $4.35 per one thousand gallons. (Usage rates have increased 25% over the same two year period as SFPUC supply rates.)

8. Government Structure Options

Stanford University is a private institution. Water service is provided on privately owned land to the central campus area that lies within its boundaries. No government structure options were noted.

9. Local Accountability and Governance

Stanford provides information regarding potable water supply, conservation and water quality on its website (http://facilities.stanford.edu/environment). Although the Utilities Division is not held to the same accountability standards as a public agency, it is subject to federal audits and governed by the guidelines of the University and applicable Federal and State regulations. The Utilities Division noted that it has achieved a very good maintenance record and maintains a high level of customer service.

E. WEST SAN MARTIN WATER WORKS, INC.

Overview

West San Martin Water Works, Inc. is a private company providing water service in the unincorporated San Martin area west of Monterey Road. The San Martin County Water District lies to the east. The District serves 277 connections. The company has been in operation for a number of years, owned and operated by the same family the entire time. The source of supply is groundwater.

As a private entity, West San Martin Water Works, Inc. is not subject to LAFCo purview and no determinations have been included. The Company is included in the report to ensure a comprehensive review of water service in Santa Clara County.

1. Growth and Population

West San Martin Water Works currently provides service to the following connections:

Connection Type	Count	Percent of Total
Residential	234	85%
Commercial/Manufacturing/Industrial	40	14%
Other – Governmental	3	1%
Total	277	100%

The company noted that it is expecting a 2% to 5% annual increase in population accompanied by a related increase in water demand. The company usually adds a few new connections each year. Steady growth is projected, consistent with growth estimates for the South County in general.

2. Infrastructure Needs and Deficiencies

West San Martin Water Works provides groundwater treatment and water distribution within its service area. The water system is comprised of the following:

Facility	Quantity
Pipelines	16 miles
Reservoirs (Tanks)	2
Total Water Storage Volume	0.55 MG
Pump Stations	2
Wells	3
Total Well Pumping Capacity	NP
Pressure Zones	3

Two of the company's wells have perchlorate treatment facilities provided by the Olin Corporation. Olin has been identified as the manufacturing operation that originally created the perchlorate contamination.

Two of the wells have new pumps installed within the last year. The three reservoirs are rated in good to excellent condition. They were each cleaned and inspected in 2003. 90% of the company's customers are in Pressure Zone 1.

Water Demands

According to data provided by the company and the SCVWD, West San Martin Water Works extracted 387.92 acre-feet in 2003.

Demand	Quantity
Existing Average Annual Demand	0.35 MGD
Existing Maximum Day Demand	NP
Existing Peak Hour Demand	NP
Build-Out Average Annual Demand (2020)	NP
Build-Out Maximum Day Demand	NP

NP – Not provided

The company primarily serves residential accounts; it does not have a water conservation program. The largest demand is from the Corde Valle Golf Course for irrigation. This property encompasses nearly half of the company's service area. It is irrigated with domestic water; recycled water is not available in the area.

Water Supply

West San Martin Water Works relies on groundwater extracted from the Llagas Sub-basin, one of three sub-basins of the Santa Clara Valley Groundwater Basin. The company has no interconnections to other systems. Groundwater recharge is performed by the SCVWD, and the company pays a pump tax to cover its share of those costs.

Supply	Current Volume	Maximum Available (Contractual)	Percent of Total
SCVWD – groundwater	387.92 AF		100%
Total	387.92 AF		100%

West San Martin Water Works overlies the Llagas Sub-basin, as do the other water purveyors in the South County. Groundwater quality is of critical concern, particularly with the continuing use of septic systems in the San Martin area and previous manufacturing land use in the South County region. Septic systems and agriculture are known to increase nitrate levels in groundwater. Perchlorate contamination from previous manufacturing operations further north has been identified in the groundwater extracted through the company's wells. Water treatment facilities have been provided by Olin.

Recycled water is not available within the company's service area.

Water Storage

The company has three storage facilities with a total capacity of 0.55 million gallons. The tanks are regularly cleaned and inspected; all are rated in good to excellent condition. With this storage capacity, the company is able to store a supply equal to 1½ days of average day demand.

Summary

West San Martin Water Works faces the same issues as the public water agencies in South County, including rising costs and groundwater quality. It is treating contaminated water through a system provided by the Olin Corporation. The company has adequate storage to meet demand.

3. Financing Constraints and Opportunities

West San Martin Water Works declined to provide proprietary financial information for this review.

4. Cost Avoidance Opportunities

No information was provided.

5. Management Efficiencies

West San Martin Water Works is a family business. Specific staffing information was not provided; however it was noted that family members involved in the business handle all the tasks, including system operations, billing and collections.

6. Shared Facilities

As a private entity, West San Martin Water Works has limited opportunities to share facilities. However, if a collaborative water service planning effort is established between Morgan Hill, Gilroy, the County and the San Martin County Water District, the private purveyors in the region should be included for information purposes at a minimum.

The company is not participating in the Perchlorate Working Group, presumably due to the fact that it settled with the Olin Corporation in exchange for a treatment facility.

7. Rate Restructuring

Supply Rates

The company pays a groundwater pump tax to the SCVWD to cover the costs associated with that District's groundwater recharge program. Rates have increased 67% since 2002, and the rapidly increasing pump tax rate is an ongoing issue for the Company as it is not able to pass the full incremental cost increase onto customers. The company is currently paying the following pump tax rate:

SCVWD: Groundwater = $200/AF

Most retailers of the SCVWD are expecting the pump tax rate to continue to increase significantly over time, which will result in rate increases for the end users.

Demand Rates

The company did not provide specific information regarding its rate structure; however the Company is subject to CPUC oversight and the Commission must approve all rate changes. The company noted that average monthly bills vary from $20 per month in older parts of the service area to $400 for large estates in peak use months.

8. Government Structure Options

West San Martin Water Works, Inc. is a private entity. Water service is provided to parcels within its service area that has been approved by the California Public Utilities Commisison. No government structure options were noted.

9. Local Accountability and Governance

West San Martin Water Works, Inc. is a private entity operated under the direction of a Board of Directors consisting of three family members. Directors are elected or appointed at the company's annual meeting. The company provides service-related information to its customers as appropriate.

5. RELATED AGENCIES

San Francisco Public Utilities Commission

Bay Area Water Supply and Conservation Agency

A. SAN FRANCISCO PUBLIC UTILITIES COMMISSION

The San Francisco Public Utilities Commission (SFPUC) is a department of the City and County of San Francisco that provides water, wastewater services, and municipal power to the City of San Francisco. Under contractual agreements, 28 wholesale water agencies in Alameda, San Mateo, and Santa Clara Counties also purchase water supplies from the SFPUC. The 28 wholesale customers comprise the Bay Area Water Supply and Conservation Agency (BAWSCA). The SFPUC's existing water supplies are from the Hetch Hetchy System and the Local Bay Area Watershed (San Mateo Creek, Pilarcitos Creek and Alameda Creed Watersheds). The water providers in this area are dependent on this source of supply to meet a portion of demand as the capacity of groundwater systems and the SCVWD's imported water systems are not sufficient to fully meet demand. The SFPUC's major capital improvement program underway will have a significant impact on the water purveyors and rate payers within the system's service area, providing greater reliability as well as long-term cost increases.

The SFPUC is not subject to the authority of Santa Clara LAFCo, and no determinations have been included. The information is provided in order to provide a comprehensive overview of the water resources of Santa Clara County.

Water System

SFPUC's main water source is the Hetch Hetchy System. On average the Hetch Hetchy system provides about 83% of the total SFPUC system supply. The Hetch Hetchy System is supplied by runoff from the upper Tuolumne River watershed that is collected in three major reservoirs including the Hetch Hetchy Reservoir. Water is delivered through a 167-mile gravity fed system to 2.4 million customers in Alameda, Santa Clara, San Mateo and San Francisco counties. The system was constructed in the 1920's with the first water deliveries occurring in 1934. The system crosses two major earthquake faults and includes concrete and earthen dams, tunnels, reservoirs, and four major pipelines (two cross the San Francisco Bay near the Dumbarton Bridge and two extend around the bay edge through portions of southern Alameda County, northern Santa Clara County and into San Mateo County. The age of the system, the geography, and the lack of capital improvements over the years has caused increasing concern about the integrity of the system and its reliability in a major earthquake or other natural disaster.

Regional Capital Improvement Program

In May 2002, the SFPUC approved a $3.6 billion Capital Improvement Program to repair, replace and seismically upgrade the system's infrastructure. Approximately $715 million was designated for local projects within the City and County of San Francisco; the majority, $2.9 billion, was for regional projects. The cost for the local projects within San Francisco will be paid only by customers within San Francisco; the cost for the regional projects will be borne by customers in San Francisco as well as the 28 water wholesalers within the three counties. The magnitude of this program and its potential impact on regional water service led to three legislative actions.

First, AB 2058 (Papan) established the Bay Area Water Supply and Conservation Agency (BAWSCA) in 2003. This agency is the successor to the former Bay Area Water Users Association and its 28-member Board of Directors includes a representative from each of the water wholesalers. BAWSCA is the only entity with the authority to directly represent the interests of the water agencies that purchase water from San Francisco on a wholesale basis. As such, it provides crucial oversight on the SFPUC water service facilities jointly with other local public agencies or on its own to carry out the agency's purposes.

The second piece of legislation, SB 1879 (Speier) established the San Francisco Bay Area Regional Water System Financing Authority. The Authority is a regional organization with the power to raise money, if needed, to finance the regional system improvements. BAWSCA provides administrative support to the Authority.

Lastly, the State Legislature passed a third piece of legislation, AB 1823 (Papan) in response to increasing concern over accountability, cost escalation and schedule for the regional projects. AB 1823 requires the SFPUC to submit annual progress reports to the State Department of Health Services, Seismic Safety Commission, and Joint Legislative Audit Committee on implementation of its Capital Improvement Program. The legislation also requires the Commission to provide prompt notification of any changes in capital projects, costs and timelines. In September 2004 a new General Manager was appointed to manage the SFPUC. This change in leadership provided an opportunity for the SFPUC to re-evaluate the program, implement operational changes, and update cost and schedule projections.

A number of changes have been implemented within the past few months to rectify existing problems. To improve accountability, it was decided that separate monthly progress reports will be prepared for the Local CIP and Regional CIP. The SFPUC Management Team has initiated a complete review of the program. A staffing plan has been completed in order to avoid any further project delays and the SFPUC has asked that the data be corroborated by independent consultants. In addition, management issued a Memorandum defining "Project Phase Milestones/Deliverables." Each project will be monitored by the Project Controls Group and each project manager's performance will be evaluated based on schedule and deliverables. This level of information will allow the Santa Clara agencies to better monitor progress and understand project changes as they occur.

Costs

As of November 2004 total expenditures to date for regional projects were $32 million, or 1.8% of the Program Budget. It was expected that 50% of the cost would have been expended within the first three years. Cost-to-Complete projections have also changed significantly. The original budget of $2.9 billion has escalated to $3.3 billion, an increase of $423 million. This is due to a number of factors, including the following:

- $158 million for an increased scope of work for the Irvington Tunnel, Bay Division Pipeline Hydraulic Capacity Upgrade and Sunol Valley WTP New Treated Water Reservoir
- $20 million for the addition of three new projects: SFPUC/EBMUD Intertie, SF Desalination and a Programmatic EIR

- $37 million for increased planning and environmental review
- $126 million for increased management contingency and bond cost

The $3.3 billion estimate includes a Contingency and Management Reserve of $376 million and an additional 5% construction contingency for each project.

The recent cost increases indicate a degree of inadequate planning in the early stages of the program as well as the lack of foresight to include an adequate contingency budget for unforeseen project changes. For example, when the Cost-to-Complete analysis was done, it was revealed that there was no budget for Right-of-Way acquisition as it was assumed that all work would be done within the existing right-of-way. This assumption is no longer valid and the right-of-way costs for the Irvington Tunnel/Alameda Siphons are now estimated at $20 million. The original budget included $10 million for an environmental impact report that is now budgeted at $145 million. These cost increases will significantly impact all of the water wholesalers and retail customers, including those in Santa Clara County. BAWSCA has contracted with an independent consultant to review the SFPUC CIP budget and program expenditures to date. Based on the 2002 cost projections, it was estimated that the average monthly water bill for customers in the three counties would increase from $32 to $71 by 2015. It is unknown how the additional $423 million in cost will affect this.

Schedule

In terms of schedule, the SFPUC reported in November that 22 regional projects were ahead of schedule, 2 were on schedule and 15 were behind schedule. This was substantially the same as that reported in July 2004. The SFPUC Management Team is conducting a complete review of each project scope to determine its expected benefit and priority. This effort will include developing performance standards against which each project can be measured.

Summary

The SFPUC has stated that improved management measures and tighter project controls have been implemented in the past few months. New leadership in the SFPUC has provided an opportunity to confront project issues and implement corrective actions. The in-depth project level analysis that has occurred recently should daylight any planning or cost discrepancies. Inclusion of a management contingency reserve and construction contingency in the budget should also help avoid further dramatic cost increases. BAWSCA is closely monitoring the situation and receives regular updates from the SFPUC. The agencies within Santa Clara County that rely on Hetch Hetchy water must have some degree of certainty regarding CIP costs and project completion schedule as this will directly affect the rates and reliability they can provide to their retail customers.

B. BAY AREA WATER SUPPLY AND CONSERVATION AGENCY

The Bay Area Water Supply and Conservation Agency (BAWSCA) was formed in 2003 by a special act of the Legislature to represent the interests of the 26 cities and water districts, and two private utilities in Alameda, Santa Clara and San Mateo counties that purchase water on a wholesale basis from the San Francisco regional water system. The Agency does not own or manage any infrastructure nor provide any water supply.

The Bay Area Water Supply and Conservation Agency is a special district per AB 2058 (2002 Water Code §81300 et seq.); however its jurisdiction only includes a portion of Santa Clara County and Santa Clara LAFCo is not the principal LAFCo. Therefore, no determinations have been included in this review. The information is provided in order to ensure a comprehensive review of Santa Clara County's water resources and related agencies.

Agency Overview and Services

BAWSCA is the successor to the former Bay Area Water Users Association, formed in 1958. Each of the 28 wholesalers in Alameda, Santa Clara and San Mateo Counties receiving water from the SFPUC system is automatically eligible as a member of the agency. The total service area represented encompasses 460 square miles with an estimated population of 1,700,000. BAWSCA's current programs include water contract negotiation and administration, capital improvement program oversight, and financial analyses, and water resources planning. The Agency operates with 6 staff members – one Executive/ Management and five Professional/Support.

BAWSCA represents the SFPUC wholesalers' common interest, providing greater collaboration and efficiency in oversight of this source of supply, particularly at a policy level. In light of the ongoing concern regarding the status and progress of the SFPUC Regional CIP, BAWSCA recently contracted with an independent engineering consultant to review the SFPUC CIP budget and program expenditures to date.

All of SFPUC's wholesale contracts will expire in 2009. BAWSCA will be renegotiating a master contract with the SFPUC on behalf of its members and each of the wholesalers will have an individual contract directly with SFPUC per the terms and conditions of the master agreement. One critical area in which BAWSCA has been instrumental is establishing an appropriate water supply allocation among the agencies during drought periods. The existing master agreement contained a default for water allocations during drought that did not encourage water conservation was not in the best interests of the individual service areas in the region. BAWSCA successfully negotiated a new water shortage allocation agreement that was approved by all the governing boards and provides greater reliability to the wholesalers and San Francisco.

Environmental compliance for the SFPUC Capital Improvements Program requires that a Program EIR be prepared. As part of this analysis, detailed water use projections for each agency were prepared with the assistance of BAWSCA. The data has been published in three technical studies:

1) SFPUC Wholesale Customer Water Demand Projections;
2) SFPUC Wholesale Customer Water Conservation Potential; and
3) SFPUC Wholesale Customer Recycled Water Potential.

The combined results of these technical studies for the wholesale and retail service areas along with projected purchase estimates in 2030 are presented in a final technical report "2030 Purchase Estimates Technical Memorandum" (December 2004).

The Agency also provides water conservation services for its member agencies. The services provided complement those of the SCVWD but do not duplicate activities or cost. The program is designed by BAWSCA's member agencies and is provided through contractors. The charge to the participating agencies covers the cost of the program as well as BAWSCA's administrative time.

Financial Summary

BAWSCA is funded through assessments of each of its member agencies, based on a percentage of each agency's annual budget. The percentage is proportionate to the amount of SFPUC water used in 2000-2001. Assessment rates are reviewed annually. In addition to assessment revenue, BAWSCA has been successful in pursuing grant funding. The Agency was awarded a $240,000 grant by the State Department of Water Resources in FY 2003-2004. The Agency's financial summary is shown below:

BAWSCA – FY 2002-2003 Financial Summary			
Revenue -	Assessments	$1,366,621	92%
	Reserves	$80,000	5%
	Other	$37,947	3%
	Total	$1,484,568	100%
Expenses -	Expenses	$1,291,184	99%
	Capital Improvements	$9,088	1%
	Total	$1,300,272	100%
Reserves		$351,198	

The last independent audit was conducted in July 2003 for BAWUA, the predecessor of BAWSCA. The audit was not qualified in any way. BAWSCA does have the authority to issue bonds, however it currently has no long-term debt.

Shared Facilities

BAWSCA is a party to several MOUs including the following:

- Bay Area Water Agencies Coalition (BAWAC): BAWSCA and six other agencies participate in activities of BAWAC, which funds and conducts studies of various issues
- Enlarged Los Vaqueros MOU (CALFED): CALFED Studies
- Bay Area Water Quality and Supply Reliability Program MOU (BAWQSRP): CALFED Studies
- Integrated Regional Water Management Plan

BAWSCA participates in the insurance pools offered by the California Special Districts Association, ACWA and CalPers.

BAWSCA provides administrative support for the San Francisco Bay Area Regional Water System Financing Authority created by SB 1870 (2002 Water Code §81600 et seq.). The Authority will serve as the means to issue revenue bonds to finance the regional system improvements.

Local Accountability and Governance

BAWSCA is governed by a 28-member Board of Directors serving four-year terms. Twenty-six of the directors are appointed by the governing bodies of the public agencies that are members of BAWSCA. In addition, the Santa Clara County Board of Supervisors appoints a Director from the Stanford University service area and the San Mateo County Board of Supervisors appoints a director from the California Water Service Company service area.

The Board meets bimonthly on the third Thursday at 7:00 PM in Foster City. Meeting notices and agendas are distributed by email, posted on BAWSCA's website, and circulated to the City Clerks, Clerks of the Board and District Secretaries for posting. BAWSCA also maintains a website that contains detailed information on the Agency and its current projects and programs (www.bawsca.org).

6. GLOSSARY

Adjudicated Groundwater Basin: A form of groundwater management in which the groundwater rights of all the overliers and appropriators are determined in court. The court also decides 1) who the extractors are, 2) how much groundwater those well owners may produce, and 3) who the Watermaster will be to ensure that basin is managed in accordance with the court's ruling.

Acre-foot: The volume of water needed to cover one acre at a depth of one foot; equal to 325,851 gallons. As a general rule of thumb, one acre-foot serves the water needs of two families for one year.

Annexation: The inclusion, attachment of addition of territory to a city or special district.

Commercial Paper: Short-term, unsecured, discounted, and negotiable notes sold by one company to another in order to satisfy immediate cash needs

Certificate of Participation: Financing in which an individual buys a share of the lease revenues of an agreement made by a municipal or governmental entity, rather than the bond being secured by those revenues.

Cubic Foot: a volume of water equal to 7.4805195 gallons; 1 CCF equals 748 gallons

Dependent Special District: A special district whose board of directors is another legislative body, such as a city council or board of supervisors.

Detachment: The exclusion, de-annexation, deletion, or removal from a city or district.

Dissolution: The termination or disincorporation of the existence of a district.

Independent Special District: A special district that has a directly elected board of directors.

Sphere of Influence: A plan, adopted by LAFCO, for the probable physical boundaries and service areas of a city or district.

Sphere of Influence Amendment: The changing or updating of an adopted sphere of influence.

Tertiary: Third level treatment of wastewater; wastewater that receives tertiary treatment may be sold as recycled water for landscape and industrial uses. DHS establishes water quality standards and treatment reliability criteria for water recycling under Title 22, Chapter 4, of the California Code of Regulations. For water reuse applications with a high potential for the public to come in contact with the reclaimed water, Title 22 requires disinfected tertiary treatment.

Watershed stewardship: The management of natural resources in a manner that fosters ecosystem health, improved water quality, flood protection and compatible recreational opportunities.

7. APPENDICES

Appendix A: Water System Regulations for Santa Clara County

Appendix B: Recycled Water

Appendix C: Agency Profiles

A. WATER SYSTEM REGULATIONS FOR SANTA CLARA COUNTY

Water systems in Santa Clara County are regulated by a number of agencies, depending on the type of entity (public or private) and size of system (number of connections). The regulatory oversight includes both operational for service areas, system capacity and rates, and health for water quality.

The agencies and their areas of regulatory authority are shown in the table below:

TYPE OF SYSTEM	County, Dept. of Environmental Health	State, Dept. of Health Services	State, Public Utilities Commission	Santa Clara Valley Water District
Individual (1 connection)	●			●
Shared (2 – 4 service connections)	●		●	●
Small (5 – 14 service connections) "State Small Water Systems"	●		●	●
Public (at least 15 service connections)	●	●	●	●

A public water system is defined as a system, regardless of ownership, for the provision of water for human consumption through pipes or other constructed conveyances that has 15 or more service connections or regularly serves at least 25 individuals daily at least 60 days out of the year (Health & Safety Code §116275(h)). Therefore, a private water company or mutual is considered a public water system and subject to the applicable regulations for its water source and system size.

Some of the regulations applicable to water systems within the County include the following:

- California Health and Safety Code
- California Public Utilities Code
- California Public Utilities Commission: The California Public Utilities Commission (CPUC) governs the provision of water by private entities, including service area, system design, levels of service and rates. The Commission regulates investor-owned water systems, but does not have jurisdiction over municipal utilities or districts. Mutual water companies or companies owned by homeowner associations are exempt if they serve only their stockholders or members. The following General Orders apply:

  - General Order No. 103: *Rules Governing Water Service Including Minimum Standards for Design and Construction*, and
  - General Order No. 96-A, *Rules Governing the Filing and Posting of Schedules of Rates, Rules, and Contracts.*
- County of Santa Clara Ordinance Code:
  - Division B7, Section 12 addresses water supply for fire flow and authorizes the County Fire Marshall to determine adequacy based on location and building types
  - Division B11 - Environmental Health includes the County regulations for construction of individual or small private water systems and State Small Water Systems.
- Santa Clara Valley Water District Well Ordinance 90-1 regulates the classification, construction and destruction of wells within Santa Clara County. All wells must be classified as active, inactive or abandoned/unused. Active wells within the Districts' groundwater charge zones are subject to the District's groundwater production requirements and require the filing of groundwater production statements. Any change in well status requires a permit issued by the District, including new well construction and abandonment.

Individual Private Water System – 1 connection

A private water system which receives water from a well and serves only one owner is not subject to the regulatory authority of the State. Local regulations are primarily related to new well construction or abandonment. For any new system, a clearance must be obtained from the County through the Department of Environmental Health prior to construction. As a condition of approval, the applicant must demonstrate acceptable water quality through lab testing and analysis, the reliability of water supply, and adequate storage. Source capacity must be equal to or exceed a sustained 2.5 gallons per minute during a twenty-four period of continuous pumping, or until 3,600 gallons have been achieved during a time period of twenty-four hours or less of continuous pumping. In addition, a sustained 2.5 gallons-per-minute yield must be demonstrated during the dry season of August through October. Minimum required storage capacity is 1,000 gallons.

In addition, the system is subject to the SCVWD's Well Ordinance 90-1 and a permit must be obtained prior to construction. Any change in the well's status, including abandonment, requires a permit to change the classification.

System maintenance and water quality monitoring is the responsibility of the system's owner.

Shared Water System – 2 to 4 connections

The regulatory authority for shared systems with two to four connections is similar to that of individual systems, with a few exceptions. A clearance must be obtained from the County prior to construction. As with individual systems, the same requirements apply for water quality, adequate supply and storage with the minimum capacity applicable to each connection.

If the system is operated as a corporation, association or mutual water company and only providing water to its stockholders and members at cost, or to the State or any state agency or department, or any public district (city, county, school district, etc.), or federal agency for use in fire protection or park operations, then it is not subject to the regulation of the California Public Utilities Commission. In addition, mutual water companies may provide water in an emergency to property located within or adjacent to the service area of the mutual without changing the mutual's status.

If the system is providing water to anyone other than the above, the water company will be subject to the regulatory oversight of the Public Utilities Commission. The system would have to be approved by the CPUC for its operational components, including service area, system capacity and rates.

If the system's water source includes groundwater, it is subject to the Santa Clara Valley Water District's Well Ordinance 90-1 as described above. Water quality is monitored by the individual owners; neither the County nor the California Department of Health Services inspects these smaller systems.

Small Water System – 5 to 14 connections (State Small Water Systems)

Water systems with five to fourteen connections are known as "State Small Water Systems." A permit from the County's Department of Environmental Health is required for construction and operation. Any change in ownership requires submission of a new application. No permit will be issued if water service for each or all connections is available from an existing public, private or mutual water system. As a condition of approval, the applicant must demonstrate that there is adequate system capacity to supply a minimum of three gallons per minute for at least twenty-four hours for each connection.

As with the smaller systems described above, ownership determines operational oversight. If it is operated as a corporation, association or mutual water company and only providing water to its owners or stockholders, it does not fall under the jurisdiction of the CPUC. If it is providing water to anyone else, it will be subject to the jurisdiction of the CPUC and General Order Nos. 103 and 96-A.

If the system's water supply includes groundwater, it is subject to the Santa Clara Valley Water District's Well Ordinance 90-1 as described above, requiring the appropriate permitting and reporting for construction, inactivity and abandonment.

The County of Santa Clara's Department of Environmental Health is responsible for monitoring the State Small Water Systems within the County for water quality. System operators are required to submit testing results at least once every three months. In addition, the State Department of Health Services may monitor systems with less than 15 service connections that meet the population threshold of 25 individuals served daily at least 60 days out of the year.

Public Water System – 15 or more connections

Water systems with 15 or more connections that serve at least 25 individuals at least 60 days out of the year are considered public water systems. These typically include county and municipal water districts, private water companies and larger mutual water companies. The public water agencies are subject to the numerous code sections in both the State's Public Utilities Code and Health and Safety Code. Private water companies are subject to the regulatory oversight of the CPUC as described above. Mutuals do not fall under the Commission's purview provided they meet the service limitations described above.

If the system's water source includes groundwater, it will be subject to the Santa Clara Valley Water District's Well Ordinance 90-1 as described above, requiring the appropriate permitting and reporting.

The California Department of Health Services (DHS) monitors the water quality of the systems with regular inspections, testing, and reporting.

Water System Ownership Changes

Acquiring or abandoning water systems requires various actions on the part of the system's operator, depending on the circumstances.

For those systems under the purview of the California Department of Health Services:

If two systems consolidate and the service boundaries do not change, no additional permitting by DHS is required. The owners must inform DHS of the responsible party and contact information. If the service boundaries change, additional permitting may be required and the applicant must demonstrate adequate water supply. If a new water source is involved (i.e. a new well or acquisition of an existing well), the entity acquiring the new source will be required to obtain a permit.

If the systems consolidate and one of the systems will be abandoned completely, no permitting is required. However, the owner of the abandoned system must request declassification as a public water system, which will make the existing permit null and void. In addition, DHS will require verification that the system has been disconnected and can no longer be used for potable supply. Wells do not have to be destroyed but it is preferable to ensure there is no potential for groundwater contamination.

For those systems under the purview of the County Department of Environmental Health:

A change in ownership of a State Small Water System will require the submission of a new application. If two systems consolidate and the new company will provide service to each house served by the former company, the County will approve the change. If the water company is connecting directly to the previous system's supply tank, no permit is required. However, if the customers of the previous company are now connecting directly to the new company's system, an application will be required. The County will require a letter from the water purveyor regarding the proposed provision of services, capacity, supply and storage.

Fire Flow Requirements

Adequate fire flow is determined by the County Fire Marshall in accordance with the 2001 California Fire Code and 2000 Uniform Fire Code. Section B7-12 of the County's Ordinance Code states that the Fire Marshall shall be guided by the fire flow requirements include in Appendix III-A of the 2000 Uniform Fire Code, which identifies fire flow requirements and fire protection systems based on the type of construction and occupancy and size of the building. The Fire Marshall does have some discretion to grant variances depending on the local conditions such as land use, structures, and fire risk.

For those entities under the regulation of the CPUC, General Order No. 103 Section VIII includes fire protection standards. However, these are considered appropriate for application on an average statewide basis and the standards of the local fire protection agency govern. Specific areas with less than the minimum fire flow requirement indicated in G.O. 103 are registered with the CPUC and mapped.

B. RECYCLED WATER

Recycled water is produced at four wastewater treatment plants, one in the South County and three in the North County.

The SCVWD has completed an Advanced Recycled Water Treatment Feasibility Study to evaluate potential new markets and uses for recycled water if its quality were enhanced. The District has also approved funding to pilot advanced treatment technology of local recycled water. The advanced treatment will improve the overall quality of the tertiary treated wastewater so that it will not impact the quality of the groundwater basin. The District will be the recycled water wholesaler in the future Coyote Valley development, per an existing agreement. This advanced treatment technology is vital in ensuring that recycled water quality is appropriate for the uses in Coyote Valley.

South County

Wastewater from Gilroy and Morgan Hill is treated at the South County Regional Wastewater Authority facility in Gilroy. The Authority is a joint effort of the Cities of Gilroy and Morgan Hill; the recycled water distribution system is owned by the SCVWD. The wastewater that is treated to a tertiary level is made available to certain areas of Gilroy for large irrigation customers. The cost to deliver recycled water into Morgan Hill has been prohibitive and therefore no lines currently extend into that city.
The Plant's treatment capacity is being expanded to 9 MGD.

North County

In northern Santa Clara County, recycled water is produced at three facilities: the Regional Water Quality Control Plant in Palo Alto, the San Jose/Santa Clara Water Pollution Control Plant, and the Sunnyvale Water Pollution Control Plant. The Regional Water Quality Control Plant Water Reuse Program serves the cities of East Palo Alto, Los Altos, Los Altos Hills, Mountain View, Palo Alto and Stanford. The Plant's functions are primarily intended to reduce pollutants and mitigate for wastewater discharged into San Francisco Bay. Recycled water is an important secondary benefit and is currently provided to the Palo Alto Golf Course, the Emily Renzel Marsh and Greer Park. A new pipeline is being designed that will increase service capacity to the Mountain View/Moffett area and restore service to Shoreline Golf Course.

The second facility producing recycled water is the Sunnyvale Water Pollution Control Plant. Currently, the recycled distribution infrastructure is only in the northern portion of Sunnyvale. Through FY 2003-2004, the City has invested $20.2 million in the water reuse system. The phase completed in FY 2003-2004 included a storage tank and increased production capacity to 2 million gallons per day.

The third facility is the San Jose/Santa Clara Water Pollution Control Plant which treats wastewater from a 300 square mile area including San Jose, Santa Clara, Milpitas, Campbell, Cupertino, Los Gatos, Saratoga and Monte Sereno. The Plant is located in Alviso and has the capacity to treat 167 million gallons per day. Approximately 10% is advance treated to tertiary levels and sold for landscape,

agricultural and industrial uses. The remaining 90% is discharged as fresh water through the Artesian Slough and into South San Francisco Bay.

Associated with that facility is South Bay Water Recycling, a program that has a number of partnering agencies, including the Cities of San Jose, Milpitas, and Santa Clara; five sanitation districts; the San Jose Water Company and the Great Oaks Water Company; the Santa Clara Valley Water District, and the US Bureau of Reclamation. The SBWR system includes over 100 miles of pipeline to serve the three cities. The program has approximately 450 customers and delivers 13 to 18 million gallons of recycled water per day. The system extends down to the Coyote Valley area.

The SCVWD subsidizes any recycled water project in the North County that offsets the demand for SCVWD treated water at $115 per acre foot of recycled water developed.

SANTA CLARA VALLEY WATER DISTRICT

Agency Information		Service Area Information	
Address:	5750 Almaden Expressway	**Service Area**	1,291 sq miles
	San Jose CA 95188-3686	**Population Served:**	1,729,417
Contact:	Rick L. Callender	**Projected Population:**	
Phone:	(408) 265 2607 ext. 2017	**2010**	1,879,700
Email/Website:	rcallender@valleywater.org	**2015**	1,949,500
	www.valleywater.org	**2020**	2,007,500
Type:	Wholesale Water (Public)	**2025**	2,064,200

System Information	
No. of Employees	903
No. of Connections per Employee	NA
Average Daily Demand (MGD)	
Maximum Day Demand (MGD)	210 MGD
No. of filed Complaints in past 12 Months	
Miles of Pipe:	142 miles
No. of Pump Stations:	3
No. of Pressure Zones:	NP
Storage Capacity	28.7 mg

Financial Information (FY 2004-2005) (in thousands)							
Revenues:	$249,357.6	**Expenses:**	$183,527.9	**Reserves:**	$149,614.6	**CIP:**	$120,500.4

Wholesale Rates	
North County Contract	$495 AF
North County Groundwater	$405 AF M/I $40.50 Agricultural
South County	$200 AF M/I $20.00 Agricultural

Service Connections	Within Boundary	Outside Boundary/Within Sphere	Outside Sphere	Total
Domestic	0	0	0	
Agriculture	34	34	0	68
Recycled	16	0	0	16
Other	76	0	0	76
Total	126	34	0	160

Supply Information - Countywide (AF/Yr)					
	Existing	2005	2010	2015	2020
Imported	182,500				262,800
Groundwater	74,300				112,000
Surface	90,500				101,000
Recycled	8,200				20,000
Total	355,500				496-546,000

Average Annual Demand Information - Countywide (AF/Yr)					
	Existing	2005	2010	2015	2020
Mun/Inst	371,153	390,205	409,348	426,221	443,205
Agriculture	60,169	56,309	52,462	48,624	44,799
Conservation	(10,345)	(26,560)	(38,478)	(45,819)	(52,715)
Total	420,977	419,954	423,332	429,026	435,289

ALDERCROFT HEIGHTS COUNTY WATER DISTRICT

Agency Information		Service Area Information	
Address:	PO Box 66349	**Service Area**	2.5 sq miles
		Population Served:	190
	Scotts Valley, CA 95067	**Projected Population:**	
Contact:	Kim Gardner, Manager	**2010**	190
Phone:	(408) 353-4255	**2015**	190
Email/Website:	Aldercroft_hcwd@yahoo.com	**2020**	190
Type:	Retail Water (Public)		

System Information	
No. of Employees:	0
No. of Connections per Employee	NA
Average Daily Demand (MGD)	0.025 MGD (seasonal)
Maximum Day Demand (MGD)	0.037 MGD
No. of filed Complaints in past 12 Months	NP
Miles of Pipe:	3.6
No. of Pump Stations:	2
No. of Pressure Zones:	3
Storage Capacity	0.37 MG

Financial Information (FY 2002-2003) (in thousands)							
Revenues:	$165.3	**Expenses:**	$116.5	**Reserves:**	$108.0	**CIP:**	$42.9

Typical Monthly Water Bill (3/4" meter, 20 ccf)					
Meter Charge	-0-	**Water Charge:**	$259.00	**Monthly Bill:**	$259.00

Service Connections	Within Boundary	Outside Boundary/Within Sphere	Outside Sphere	Total
Domestic	119	NA	NA	119
Agriculture	0	NA	NA	0
Recycled	0	NA	NA	0
Other	0	NA	NA	0
Total	119	NA	NA	119

Supply Information (AF/Yr)**	Existing	2005	2010	2015	2020
Imported	0	0	0	0	0
Groundwater	0	0	0	0	0
Surface*	22	22	22	22	22
Recycled	0	0	0	0	0
Total	22	22	22	22	22

* Source: Los Gatos Creek

Average Annual Demand Information (AF/Yr)**	Existing	2005	2010	2015	2020
Residential	22	22	22	22	22
Comm/Ind.	NA	NA	NA	NA	NA
Landscape/Irr	NA	NA	NA	NA	NA
Other	NA	NA	NA	NA	NA
Total	22	22	22	22	22

NA – not applicable; NP – not provided

PURISSIMA HILLS COUNTY WATER DISTRICT

Agency Information		Service Area Information	
Address:	26375 Fremont Rd. Los Altos Hills CA, 94022	**Service Area**	7.8 sq miles
		Population Served:	6,000
		Projected Population:	
Contact:	Patrick D. Walter	**2010**	
Phone:	(650) 948-1217	**2015**	
Email/Website:	pwalter@phwd.dst.ca.us	**2020**	
Type:	Retail Water (Public)		

System Information	
No. of Employees:	8
No. of Connections per Employee	266
Average Daily Demand (MGD)	2.5 MGD
Maximum Day Demand (MGD)	4.0 MGD
No. of filed Complaints in past 12 Months	21 (cloudy water)
Miles of Pipe:	101
No. of Pump Stations:	5
No. of Pressure Zones:	4
Storage Capacity	10.0 MG

Financial Information (FY 2004-2005) (in thousands)							
Revenues:	$3,406.7	**Expenses:**	$2,843.9	**Reserves:**	$1,229.8	**CIP:**	$263.6

Typical Monthly Water Bill (3/4" meter, 40 ccf)					
Meter Charge	$13.50	**Water Charge:**	$0.98	**Monthly Bill:**	$111.50

Service Connections	Within Boundary	Outside Boundary/Within Sphere	Outside Sphere	Total
Domestic	2,034	0	0	2,034
Agriculture	0	0	0	0
Recycled	0	0	0	0
Other	96	0	0	96
Total	2,129	0	0	2,129

Supply Information (AF/Yr)	Existing	2005	2010	2015	2020
Imported	1,820	1,820			
Groundwater	0	0			
Surface	0	0			
Recycled	0	0			
Total	1,820	1,820			

Average Annual Demand Information (AF/Yr) - *(source: 2004 Rate Study)*	Existing	2005	2010	2015	2020
Residential	2,072	2,299	2,463	2,629	2,7974
Comm/Ind.	165	234	238	244	248
Landscape/Irr	0	0	0	0	0
Other	64	0	0	0	0
Total	2,301	2,533	2,701	2,873	3,045

NA – not applicable; NP – not provided

SAN MARTIN COUNTY WATER DISTRICT

Agency Information		Service Area Information	
Address:	PO Box 120 San Martin, CA 95046	**Service Area**	0.71 sq miles
		Population Served:	
		Projected Population:	
		2010	
		2015	
		2020	
		2025	
Contact:	Peter Forest, District Manager		
Phone:	(408) 683-4101		
Email/Website:	peterforest@att.net		
Type:	Retail Water (Public)		

System Information

No. of Employees:
No. of Connections per Employee
Average Daily Demand (MGD)
Maximum Day Demand (MGD)
No. of filed Complaints in past 12 Months
Miles of Pipe:
No. of Pump Stations:
No. of Pressure Zones:
Storage Capacity

Financial Information (FY 2002-2003) (in thousands)

Revenues:	$	**Expenses:**	$	**Reserves:**	$110	**CIP:**	$

Typical Monthly Water Bill (3/4" meter, 20 ccf)

Meter Charge	**Water Charge:**	**Monthly Bill:**

Service Connections	Within Boundary	Outside Boundary/Within Sphere	Outside Sphere	Total
Domestic				184
Agriculture				0
Recycled				0
Other				0
Total				184

Supply Information (AF/Yr)**

	Existing	2005	2010	2015	2020
Imported					
Groundwater					
Surface					
Recycled					
Total					

Average Annual Demand Information (AF/Yr)**

	Existing	2005	2010	2015	2020
Residential					
Comm/Ind.					
Landscape/Irr					
Other					
Total					

NA – not applicable

PACHECO PASS WATER DISTRICT

Agency Information		Service Area Information	
Address:	PO Box 1382	**Service Area**	NP
		Population Served:	NP
	Hollister, CA 95024	**Projected Population:**	
Contact:	Patricia Richardson, Secretary	**2010**	NP
Phone:	(831) 637-0566 / (831) 637-8646 fax	**2015**	NP
Email/Website:		**2020**	NP
Type:	Groundwater recharge (Public)		

System Information	
No. of Employees:	1.5
No. of Connections per Employee	NA
Average Daily Demand (MGD)	NA
Maximum Day Demand (MGD)	NA
No. of filed Complaints in past 12 Months	NP
Miles of Pipe:	0
No. of Pump Stations:	0
No. of Pressure Zones:	0
Storage Capacity	6,500 AF

Financial Information (FY 2003-2004) (in thousands)							
Revenues:	$23.2	**Expenses:**	$84.9	**Reserves:**	$182.7	**CIP:**	$68.4

Typical Monthly Water Bill (3/4" meter, 20 ccf)					
Meter Charge	NA	**Water Charge:**	NA	**Monthly Bill:**	NA

Service Connections	Within Boundary	Outside Boundary/Within Sphere	Outside Sphere	Total
Domestic	NA	NA	NA	NA
Agriculture	NA	NA	NA	NA
Other	NA	NA	NA	NA
Total	NA	NA	NA	NA

Supply Information (AF/Yr)**	Existing	2005	2010	2015	2020
Imported	NA	NA	NA	NA	NA
Groundwater	NA	NA	NA	NA	NA
Surface*	NA	NA	NA	NA	NA
Recycled	NA	NA	NA	NA	NA
Total	NA	NA	NA	NA	NA

* Source: Los Gatos Creek

Average Annual Demand Information (AF/Yr)**	Existing	2005	2010	2015	2020
Residential	NA	NA	NA	NA	NA
Comm/Ind.	NA	NA	NA	NA	NA
Landscape/Irr	NA	NA	NA	NA	NA
Other	NA	NA	NA	NA	NA
Total	NA	NA	NA	NA	NA

NA – not applicable; NP – not provided

The Pacheco Pass Water District collects local surface runoff to be stored and released for groundwater recharge.

GUADALUPE-COYOTE RESOURCE CONSERVATION DISTRICT

Agency Information		Service Area Information	
Address:	888 North First St., Room 204 San Jose, CA 95112-6314	**Service Area**	565 sq miles
		Population Served:	NP
		Projected Population:	
Contact:	Nancy Bernardi, Conservation Coordinator	**2010**	NP
		2015	NP
Phone:	(408) 288-5888	**2020**	NP
Email/Website:	gcrcd@pacbell.net www.gcrcd.org		
Type:	Independent Special District		

Agency Information	
No. of Employees:	1
Sources of Revenue	Property Tax (93%) Investment Income (3%) Government Aid (4%)

Financial Information (FY 2002-2003) (in thousands)							
Revenues:	$118.6	**Expenses:**	$131.0	**Reserves:**	$146.3	**CIP:**	NA

Services Provided / Agency Goals

- Provides conservation service to northern Santa Clara County, including the hilly/mountainous land surrounding Santa Clara Valley north of Morgan Hill (service area drains to San Francisco Bay)
- Conservation Planning and Application through USDA NRCS
- Watershed Management Participation for Santa Clara Basin
- Floodplain Management Improvement
- Promote Proper Stream Design to Reduce Sediment by achieving Proper Stream Functions
- Riparian Corridor Management Improvement
- Waterway Protection and Restoration Improvement on both Streams and Erosive Land
- Increase Habitat Preservation Efforts
- Increase Erosion/Pollution Prevention Efforts
- Farm/Range Land Management Improvement
- Promote Pesticide, Herbicide and Chemical Alternatives
- Promote Responsible Invasive Species Control
- Promote Native Species Protection and Information Dissemination
- Promote and Conduct Scientific Studies/Education
- Promote Important Farmland Preservation

LOMA PRIETA RESOURCE CONSERVATION DISTRICT

Agency Information		Service Area Information	
Address:	810 Wayward Lane, Suite 1D Gilroy, CA 95020	**Service Area**	NP
		Population Served:	NP
		Projected Population:	
Contact:	Patricia Marfia, Office Manager	**2010**	NP
Phone:	(408) 847-4171	**2015**	NP
Email/Website:	none	**2020**	NP
Type:	Dependent Special District		

Agency Information	
No. of Employees:	0.5
Sources of Revenue	Property Tax (100%) Workshop Fees (misc.)

Financial Information (FY 2002-2003) (in thousands)							
Revenues:	$28.0	**Expenses:**	$36.1	**Reserves:**	0.5	**CIP:**	NA

Services Provided / Agency Goals

- Provides service to southern Santa Clara County (service area drains to Monterey Bay)
- Advise and assist private property owners and public agencies in the prevention of soil erosion, runoff control, development and use of water, land use planning, conservation of wildlife and other related natural resources.
- Offer public information and education programs
- Offer land management / runoff control programs to landowners who have been contacted by the RWQCB

CITY OF GILROY

Agency Information		Service Area Information	
Address:	7351 Rosanna Street Gilroy, CA 95020	**Service Area**	14.65 sq miles
		Population Served:	44,975
		Projected Population:	
Contact:	Jay Baksa, City Administrator	**2010**	56,407
Phone:	(408) 846-0400	**2015**	60,820
Email/Website:	jay@ci.gilroy.ca.us www.ci.gilroy.ca.us	**2020**	65,082
Type:	Retail Water (Public)		

System Information	
No. of Employees:	18
No. of Connections per Employee	642
Average Daily Demand (MGD)	7.4 MGD
Maximum Day Demand (MGD)	13.7 MGD
No. of filed Complaints in past 12 Months	16
Miles of Pipe:	120
No. of Pump Stations:	6 booster
No. of Pressure Zones:	3
Storage Capacity	14.07

Financial Information (FY 2002-2003) (in thousands)							
Revenues:	$4,852	**Expenses:**	$4,646	**Reserves:**	$0	**CIP:**	$864

Typical Monthly Water Bill (3/4" meter, 20 ccf)					
Meter Charge	$4.83	**Water Charge:**	$17.45	**Monthly Bill:**	$22.28

Service Connections	Within Boundary	Outside Boundary/Within Sphere	Outside Sphere	Total
Domestic	10,324	1	NA	10325
Agriculture/Irrig	392	1	NA	393
Recycled	3	0	NA	3
Other	837	2	NA	839
Total	11,556	4	NA	11,560

Supply Information (AF/Yr)	Existing	2005	2010	2015	2020
Imported	0	0	0	0	0
Groundwater	17,362	25,539	32,036	32,036	34,500
Surface	0	0	0	0	0
Recycled	0	0	0	0	0
Total	17,362	25,539	32,036	32,036	34,500

Average Annual Demand Information (AF/Yr)**	Existing	2005	2010	2015	2020
Residential	5250	NP	NP	NP	NP
Comm/Ind.	1328	NP	NP	NP	NP
Landscape/Irr	715	NP	NP	NP	NP
Other	NA	NP	NP	NP	NP
Total	7293	9,857	11,425	12,210	13,106

NA – not applicable; NP – not provided

CITY OF MILPITAS

Agency Information		Service Area Information	
Address:	455 E. Calaveras Blvd. Milpitas, CA 95035	**Service Area**	13.6
		Population Served:	64,000
		Projected Population:	
Contact:	Darryl Wong	**2010**	73,000
Phone:	(408) 586 3345	**2015**	76,000
Email/Website:	Dwong@ci.milpitas.ca.gov	**2020**	78,000
Type:	Retail Water (Public)	*Source: 2000 UWMP*	

System Information	
No. of Employees:	14
No. of Connections per Employee	22
Average Daily Demand (MGD)	10.4
Maximum Day Demand (MGD)	19.63
No. of filed Complaints in past 12 Months	NP
Miles of Pipe:	198
No. of Pump Stations:	5
No. of Pressure Zones:	
Storage Capacity	16.26 Million Gallons

Financial Information (FY 2002-2003) (in thousands)							
Revenues:	**$11,432,000**	**Expenses:**	**$8,900,000**	**Reserves:**	**$240,000**	**CIP:**	**$1,195,000**

Typical Monthly Water Bill (3/4" meter, 20 ccf)					
Meter Charge	$	**Water Charge:**	$	**Monthly Bill:**	

Service Connections	Within Boundary	Outside Boundary/Within Sphere	Outside Sphere	Total
Domestic	13,773	NA	NA	13,773
Agriculture	320	NA	NA	320
Recycled	135	NA	NA	135
Other	907	NA	NA	907
Total	15,198	NA	NA	15,198

Supply Information (AF/Yr)	Existing	2005	2010	2015	2020
Imported	NP	NP	NP	NP	NP
Groundwater	NP	NP	NP	NP	NP
Surface	NP	NP	NP	NP	NP
Recycled	NA	NA	NA	NA	NA
Total	NP	NP	NP	NP	NP

Average Annual Demand Information (AF/Yr)	Existing	2005	2010	2015	2020
Residential	NP	NP	NP	NP	NP
Comm/Ind.	NP	NP	NP	NP	NP
Landscape/Irr	NP	NP	NP	NP	NP
Other	NP	NP	NP	NP	NP
Total	NP	NP	NP	NP	NP

NA – not applicable; NP – not provided

CITY OF MORGAN HILL

Agency Information		Service Area Information	
Address:	17555 Peak Avenue Morgan Hill, CA 95037	**Service Area**	12 sq miles
		Population Served:	34,918
		Projected Population:	
Contact:	Jim Ashcraft, Public Works Director	**2010**	38,300
Phone:	(408) 776-7337	**2015**	43,400
Email/Website:	jima@morgan-hill.ca.gov www.morgan-hill.ca.gov	**2020**	48,000
Type:	Retail Water (Public)		

System Information	
No. of Employees:	17
No. of Connections per Employee	641
Average Daily Demand (MGD)	6.8 MGD
Maximum Day Demand (MGD)	13.2 MGD
No. of filed Complaints in past 12 Months	40 in 2003
Miles of Pipe:	160
No. of Pump Stations:	10 booster
No. of Pressure Zones:	7
Storage Capacity	9.48 mg

Financial Information (FY 2003-2004) (in thousands)							
Revenues:	$6,613	**Expenses:**	$6,750	**Reserves:**	$1,224	**CIP:**	$1,711

Typical Monthly Water Bill (3/4" meter, 20 ccf)					
Meter Charge	$5.20	**Water Charge:**	$30.30	**Monthly Bill:**	$35.50

Service Connections	Within Boundary	Outside Boundary/Within Sphere	Outside Sphere	Total
Domestic	9,662	199	0	9,861
Agriculture/Irrig	483	1	0	484
Recycled	0	0	0	0
Other	756	1	0	757
Total	10,901	201	0	11,102

Supply Information (AF/Yr)	Existing	2005	2010	2015	2020
Imported	0	0	0	0	0
Groundwater	7,549	8,178	8,690	9,721	10,752
Surface	0	0	0	0	0
Recycled	0	0	0	0	0
Total	7,549	8,178	8,690	9,721	10,752

Average Annual Demand Information (AF/Yr)**	Existing	2005	2010	2015	2020
Residential	5,586	6,052	6,431	7,194	7,956
Comm/Ind.	755	818	869	972	1,075
Landscape/Irr	0	0	0	0	0
Other	1,132	1,227	1,304	1,458	1,631
Total	7,549	8,178	8,690	9,721	10,752

NA – not applicable; NP – not provided

CITY OF MOUNTAIN VIEW

Agency Information		Service Area Information	
Address:	PO Box 7540 Mountain View, CA 94039-7540	**Service Area**	12 sq miles
14,3		**Population Served:**	72,006
Contact:	Alison Turner	**Projected Population:**	
Phone:	(650) 903-6329	**2010**	75,172
Email/Website:	Alison.turner@ci.mtnview.ca.us www.ci.mtnview.ca.us	**2015**	77,331
		2020	80,470
Type:	Retail Water (Public)	(ABAG Jurisdictional)	

System Information	
No. of Employees:	34
No. of Connections per Employee	465
Average Daily Demand (MGD)	12.5 MGD
Maximum Day Demand (MGD)	21.0 MGD
No. of filed Complaints in past 12 Months	66 CDHS and 146 inquiries
Miles of Pipe:	174.7
No. of Pump Stations:	2
No. of Pressure Zones:	3
Storage Capacity	21 AF

Financial Information (FY 2002-2003) (in thousands)							
Revenues:	$15,541	**Expenses:**	$12,163	**Reserves:**	$5,357	**CIP:**	$3,424

Typical Monthly Water Bill (3/4" meter, 20 ccf)					
Meter Charge	$3.90	**Water Charge:**	$44.55	**Monthly Bill:**	$47.45

Service Connections	Within Boundary	Outside Boundary/Within Sphere	Outside Sphere	Total
Domestic	13,384	0	0	13,384
Agriculture/Irrig	778	0	0	778
Recycled	0	0	0	0
Other	1,642	0	0	1,642
Total	15,804	0	0	15,804

Supply Information (AF/Yr)	Existing	2005	2010	2015	2020
Imported	13,320.1	14,336	14,336	14,585	14,947
Groundwater	92.6	0	0	0	0
Surface	0	0	0	0	0
Recycled	0	0	0	0	0
Total	13,412	13,930	14,336	14,585	14,947

Average Annual Demand Information (AF/Yr)	Existing	2005	2010	2015	2020
Residential	6,961	7,163	7,208	7,262	7,297
Comm/Ind.	2,525	2,959	3,109	3,151	3,231
Landscape/Irr	3,303	3,793	4,096	4,214	4,404
Other	10	14	14	15	15
Total	12,805	13,930	14,336	14,585	14,947

NA – not applicable; NP – not provided

CITY OF PALO ALTO

Agency Information		Service Area Information	
Address:	250 Hamilton Avenue Palo Alto, CA	**Service Area**	25.98 sq miles
14,3		**Population Served:**	58,598
Contact:	Rosemary Ralston	**Projected Population:**	
Phone:	(650) 329-2522	**2010**	
Email/Website:	Rosemary.ralston@cityofpaloalto.org www.cityofpaloalto.org	**2015**	
Type:	Retail Water (Public)	**2020**	

System Information	
No. of Employees:	40
No. of Connections per Employee	
Average Daily Demand (MGD)	
Maximum Day Demand (MGD)	
No. of filed Complaints in past 12 Months	
Miles of Pipe:	
No. of Pump Stations:	5
No. of Pressure Zones:	
Storage Capacity	10.5

Financial Information (FY 2002-2003) (in thousands)							
Revenues:	$15,541	**Expenses:**	$12,163	**Reserves:**	$5,357	**CIP:**	$3,424

Typical Monthly Water Bill (3/4" meter, 20 ccf)					
Meter Charge	$3.90	**Water Charge:**	$44.55	**Monthly Bill:**	$47.45

Service Connections	Within Boundary	Outside Boundary/Within Sphere	Outside Sphere	Total
Domestic	15,797	0	0	15,797
Agriculture/Irrig	781	0	0	781
Recycled	0	0	0	0
Other	2,965	0	0	2,965
Total	19,543	0	0	19,543

Supply Information (AF/Yr)	Existing	2005	2010	2015	2020
Imported					
Groundwater					
Surface					
Recycled					
Total					

Average Annual Demand Information (AF/Yr)	Existing	2005	2010	2015	2020
Residential					
Comm/Ind.					
Landscape/Irr					
Other					
Total					

NA – not applicable; NP – not provided

SAN JOSE MUNICIPAL WATER SYSTEM

Agency Information		Service Area Information	
Address:	3025 Tuers Road San Jose, CA 95121	**Service Area**	33.3 sq miles
		Population Served:	116,208
		Projected Population:	
Contact:	Mansour Nasser, Water Utility Mgr.	**2010**	130,113
Phone:	(408) 277-4218	**2015**	140,334
Email/Website:	mansour.nasser@sanjoseca.gov http://www.sjmuniwater.com	**2020**	154,203
Type:	Retail Water (Public)		

System Information	
No. of Employees:	35
No. of Connections per Employee	738
Average Daily Demand (MGD)	19
Maximum Day Demand (MGD)	33.3 MGD
No. of filed Complaints in past 12 Months	NP
Miles of Pipe:	325
No. of Pump Stations:	15
No. of Pressure Zones:	8
Storage Capacity	36.5 mg

Financial Information (FY 2002-2003) (in thousands)							
Revenues:	$18,229	**Expenses:**	$16,131	**Reserves:**	$12,172	**CIP:**	$3,032

Typical Monthly Water Bill (3/4" meter, 20 ccf)					
Meter Charge	$6.00	**Water Charge:**	$33.06	**Monthly Bill:**	$39.06

Service Connections	Within Boundary	Outside Boundary/Within Sphere	Outside Sphere	Total
Domestic	23,821	1	NA	23,822
Agriculture	NA	NA	NA	NA
Recycled	145	NA	NA	1145
Other	1,859	NA	NA	1,859
Total	25825	1	NA	25,826

Supply Information (AF/Yr)	Existing	2005	2010	2015	2020
Imported	20,715	20,912	22,151	23,969	24,908
Groundwater	643	1,836	2,755	3,673	3,673
Surface	0	0	0	0	0
Recycled	2,433	2,104	10,000	12,000	13,000
Total	21,358	24,852	34,906	39,642	41,581

Average Annual Demand Information (AF/Yr)	Existing	2005	2010	2015	2020
Residential	11,105	12,874	14,925	17,301	20,058
Comm/Ind.	3,234	3,749	4,346	5,038	5,841
Landscape/Irr	4,235	4,909	5,691	6,598	7,649
Other	1,049	1,216	1,410	1,635	1,885
Total	19,623	22,748	26,372	30,572	35,433

NA – not applicable

CITY OF SANTA CLARA

Agency Information		Service Area Information	
Address:	1500 Warburton Avenue Santa Clara, CA 95050	**Service Area**	19.3 sq miles
		Population Served:	106,000
		Projected Population:	
Contact:	Dennis Ma	**2010**	
Phone:	(408) 615-2012	**2015**	
Email/Website:	dma@ci.santa-clara.ca.us http://www.ci.santa-clara.ca.us	**2020**	136,000
Type:	Retail Water (Public)		

System Information	
No. of Employees:	43.5
No. of Connections per Employee	573
Average Daily Demand (MGD)	23 MGD
Maximum Day Demand (MGD)	33 MGD
No. of filed Complaints in past 12 Months	Est. <200 (#1 complaint is milky water due to air)
Miles of Pipe:	295
No. of Pump Stations:	3
No. of Pressure Zones:	4
Storage Capacity	27.3 MG

Financial Information (FY 2002-2003) (in thousands)							
Revenues:	$16,205	**Expenses:**	$14,757	**Reserves:**	$499.5	**CIP:**	$14,448

Typical Monthly Water Bill (3/4" meter, 20 ccf)					
Meter Charge	$0.00	**Water Charge:**	$34.86	**Monthly Bill:**	$34.86

Service Connections	Within Boundary	Outside Boundary/Within Sphere	Outside Sphere	Total
Domestic	20,680	NA	NA	20,680
Irrigation	3,748	NA	NA	3,748
Recycled	159	NA	NA	159
Other	325	NA	NA	325
Total	24,915	NA	NA	24,915

Supply Information (AF/Yr)	Existing	2005	2010	2015	2020
Imported					
Groundwater					
Surface					
Recycled					
Total					

Average Annual Demand Information (AF/Yr)	Existing	2005	2010	2015	2020
Residential					
Comm/Ind.					
Landscape/Irr					
Other					
Total					

NA – not applicable

CITY OF SUNNYVALE

Agency Information		Service Area Information	
Address:	PO Box 3707 Sunnyvale, CA 94088	**Service Area**	24 sq miles
		Population Served:	131,760
		Projected Population:	
Contact:	James G. Craig	**2010**	
Phone:	(408) 730-7558	**2015**	
Email/Website:	jcraig@ci.sunnyvale.ca.us http://www.ci.sunnyvale.ca.us	**2020**	
Type:	Retail Water (Public)		

System Information	
No. of Employees:	28
No. of Connections per Employee	878
Average Daily Demand (MGD)	22.6 MGD
Maximum Day Demand (MGD)	29.0 MGD
No. of filed Complaints in past 12 Months	2
Miles of Pipe:	280
No. of Pump Stations:	5
No. of Pressure Zones:	3
Storage Capacity	27.5 MG

Financial Information (FY 2002-2003) (in thousands)							
Revenues:	$197,575	**Expenses:**	$187,575	**Reserves:**	($14,515_	**CIP:**	$24,516

Typical Monthly Water Bill (3/4" meter, 20 ccf)					
Meter Charge	$3.68	**Water Charge:**	$39.19	**Monthly Bill:**	$42.87

Service Connections	Within Boundary	Outside Boundary/Within Sphere	Outside Sphere	Total
Domestic	24,587	NA	NA	24,587
Irrigation	767	NA	NA	767
Recycled	89	NA	NA	89
Other	1,904	NA	NA	1,904
Total	27,347	NA	NA	27,347

Supply Information (AF/Yr)	Existing	2005	2010	2015	2020
Imported					
Groundwater					
Surface					
Recycled					
Total		25,133	25,458	25,783	26,119

Average Annual Demand Information (AF/Yr)	Existing	2005	2010	2015	2020
Residential					
Comm/Ind.					
Landscape/Irr					
Other					
Total					

NA – not applicable

CALIFORNIA WATER SERVICE COMPANY

(Los Altos – Suburban District)

Agency Information		Service Area Information	
Address:	1720 North First Street San Jose, CA 95112	**Service Area**	NP
		Population Served:	NP
		Projected Population:	
Contact:	Ron Richardson	**2010**	NP
Phone:	(650) 917-0152	**2015**	NP
Email/Website:	rrichardson@calwater.com http://www.calwater.com	**2020**	NP
		2025	NP
Type:	Retail Water (Private)		

System Information	
No. of Employees:	802
No. of Connections per Employee	22
Average Daily Demand (MGD)	NP
Maximum Day Demand (MGD)	NP
No. of filed Complaints in past 12 Months	NP
Miles of Pipe:	293+
No. of Pump Stations:	NP
No. of Pressure Zones:	18
Storage Capacity	14.686 mg

Financial Information (FY 2002-2003) (in thousands)							
Revenues:	NP	**Expenses:**	NP	**Reserves:**	NP	**CIP:**	$1,800

Typical Monthly Water Bill (3/4" meter, 20 ccf)					
Meter Charge	$14.70	**Water Charge:**	$38.64	**Monthly Bill:**	$53.34

Service Connections	Within Boundary	Outside Boundary/Within Sphere	Outside Sphere	Total
Domestic	16,500	NA	NA	16,500
Agriculture	0	NA	NA	0
Recycled	0	NA	NA	0
Other	1,307	NA	NA	1,307
Total	17,807	NA	NA	17,807

Supply Information (AF/Yr)	Existing	2005	2010	2015	2020
Imported	NP	NP	NP	NP	NP
Groundwater	4,459	NP	NP	NP	NP
Surface	NP	NP	NP	NP	NP
Recycled	NA	NA	NA	NA	NA
Total	NP	NP	NP	NP	NP

Average Annual Demand Information (AF/Yr)	Existing	2005	2010	2015	2020
Residential	NP	NP	NP	NP	NP
Comm/Ind.	NP	NP	NP	NP	NP
Landscape/Irr	NP	NP	NP	NP	NP
Other	NP	NP	NP	NP	NP
Total	NP	NP	NP	NP	NP

NA – not applicable; NP – not provided

GREAT OAKS WATER COMPANY

Agency Information		Service Area Information	
Address:	15 Great Oaks Blvd., Suite 100 San Jose, CA 95119	**Service Area**	NP
		Population Served:	70,963
		Projected Population:	
Contact:	Alan Gardner, Chief Operating Officer	**2010**	NP
		2015	NP
Phone:	(408) 227-9540	**2020**	NP
Email/Website:	agardner@greatoakswater.com www.greatoakswater.com		
Type:	Retail Water (Private)		

System Information	
No. of Employees:	16
No. of Connections per Employee	1,261
Average Daily Demand (MGD)	NP
Maximum Day Demand (MGD)	NP
No. of filed Complaints in past 12 Months	NP
Miles of Pipe:	185
No. of Pump Stations:	NP
No. of Pressure Zones:	NP
Storage Capacity	6.23 MG

Financial Information (FY 2002-2003) (in thousands)							
Revenues:	NP	**Expenses:**	NP	**Reserves:**	NP	**CIP:**	NP

Typical Monthly Water Bill (3/4" meter, 20 ccf)					
Meter Charge	$5.25	**Water Charge:**	$32.10	**Monthly Bill:**	$37.735

Service Connections	Within Boundary	Outside Boundary/Within Sphere	Outside Sphere	Total
Domestic	19,935			19,935
Agriculture	0			0
Recycled	0			0
Other	235			235
Total	20,170			20,170

Supply Information (AF/Yr)	Existing	2005	2010	2015	2020
Imported	0				
Groundwater	12,792				
Surface	0				
Recycled	0				
Total	12,792				

Average Annual Demand Information (AF/Yr)**	Existing	2005	2010	2015	2020
Residential					
Comm/Ind.					
Landscape/Irr					
Other					
Total	12,792				

NA – not applicable; NP – not provided

SAN JOSE WATER COMPANY

Agency Information		Service Area Information	
Address:	1221 S. Bascom Ave. San Jose, CA 95128	**Service Area**	138 sq miles
		Population Served:	1,000,000
		Projected Population:	
Contact:	George Belhumeur	**2010**	1,054,000
Phone:	(408) 279-7805	**2015**	1,081,000
Email/Website:	George_belhumeur@sjwater.com http://www.sjwater.com/	**2020**	1,108,000
Type:	Retail Water (Private)		

System Information	
No. of Employees:	301
No. of Connections per Employee	721
Average Daily Demand (MGD)	138.0 MGD
Maximum Day Demand (MGD)	232.6 MGD
No. of filed Complaints in past 12 Months	NP
Miles of Pipe:	2,475
No. of Pump Stations:	217; 428 MGD
No. of Pressure Zones:	65
Storage Capacity	6,920 AF

Financial Information (FY 2002-2003) (in thousands)							
Revenues:	$149,700	**Expenses:**	$126,800	**Reserves:**	NA	**CIP:**	$28,700

Typical Monthly Water Bill (3/4" meter, 20 ccf)					
Meter Charge	$9.50	**Water Charge:**	$37.14	**Monthly Bill:**	$46.64

Service Connections	Within Boundary	Outside Boundary/Within Sphere	Outside Sphere	Total
Domestic	215,029	NA	NA	215,029
Agriculture	0	NA	NA	0
Recycled	40	NA	NA	40
Other	2,046	NA	NA	2,046
Total	217,115	NA	NA	217,115

Supply Information (AF/Yr)	Existing	2005	2010	2015	2020
Imported	83,120				
Groundwater	65,687				
Surface	7,856				
Recycled	1,000				
Total	157,663				

Average Annual Demand Information (AF/Yr)	Existing	2005	2010	2015	2020
Residential	87,615				
Comm/Ind.	46,759				
Landscape/Irr	1,000				
Other	0				
Total	135,374				

NA – not applicable

STANFORD UNIVERSITY UTILITIES DIVISION

Agency Information		Service Area Information		
Address:	327 Bonair Siding Stanford Utilities Stanford, CA 94305-7272	**Service Area**		2.5 sq miles
Contact:	Marty Laporte	**Population Served:**		24,700
Phone:	(650) 725-7864	**Projected Population:**		
Email/Website:	martyl@bonair.standford.edu http://facilities.stanford.edu/environment/		**2010**	26,800
			2020	27,000
			2025	
Type:	Retail Water (Private)		**2030**	27,924

System Information	
No. of Employees:	3
No. of Connections per Employee	NA
Average Daily Demand (MGD)	2.5 MGD
Maximum Day Demand (MGD)	4.2 MGD
No. of filed Complaints in past 12 Months	NP
Miles of Pipe:	NP
No. of Pump Stations:	4
No. of Pressure Zones:	3
Storage Capacity (potable & non-potable)	451.2 mg

Financial Information (FY 2002-2003) (in thousands)							
Revenues:	NP	**Expenses:**	NP	**Reserves:**	NP	**CIP:**	NP

Typical Monthly Water Bill (3/4" meter, 20 ccf)					
Meter Charge	N/A	**Water Charge:**	$65.08	**Monthly Bill:**	$65.08

Service Connections	Within Boundary	Outside Boundary/Within Sphere	Outside Sphere	Total
Domestic	1,414	NA	NA	1,414
Agriculture	2	NA	NA	2
Recycled	NA	NA	NA	NA
Other	NA	NA	NA	NA
Total	1,416	NA	NA	1,416

Supply Information (AF/Yr)	Existing	2005	2010	2015	2020
Imported					
Groundwater					
Surface					
Recycled			under evaluation		
Total					

Average Annual Demand Information (AF/Yr)	Existing	2005	2010	2015	2020
Residential	1,369				
Comm/Ind.	904				
Landscape/Irr	1,543				
Other	80				
Total	3,896	4,628	4,889	5,154	5,428

NA – not applicable; NP – not provided

WEST SAN MARTIN WATER WORKS, INC.

Agency Information		Service Area Information	
Address:	1005 Highland Avenue San Martin, CA 95046	**Service Area**	NP
		Population Served:	NP
		Projected Population:	
Contact:	Bob Ukestad	**2010**	Increase 2-5%
Phone:	(408) 683-2098	**2015**	annually
Email/Website:	ukestad@email.com	**2020**	
		2025	
Type:	Retail Water (Private)		

System Information	
No. of Employees:	0
No. of Connections per Employee	NA
Average Daily Demand (MGD)	
Maximum Day Demand (MGD)	
No. of filed Complaints in past 12 Months	
Miles of Pipe:	16
No. of Pump Stations:	2
No. of Pressure Zones:	3
Storage Capacity	0.55 MG

Financial Information (FY 2002-2003) (in thousands)							
Revenues:	NP	**Expenses:**	NP	**Reserves:**	NP	**CIP:**	NP

Typical Monthly Water Bill (3/4" meter, 20 ccf)			
Meter Charge	**Water Charge:**	**Monthly Bill:**	Range from $20-$400

Service Connections	Within Boundary	Outside Boundary/Within Sphere	Outside Sphere	Total
Domestic	234	NA	NA	234
Commercial	40	NA	NA	40
Recycled	0	NA	NA	0
Other (Govt)	3	NA	NA	3
Total	277	NA	NA	277

Supply Information (AF/Yr)	Existing	2005	2010	2015	2020
Imported	0	0	0	0	0
Groundwater	400	420	441	463	486
Surface	0	0	0	0	0
Recycled	0	0	0	0	0
Total					

Average Annual Demand Information (AF/Yr)	Existing	2005	2010	2015	2020
Residential					
Comm/Ind.					
Landscape/Irr					
Other					
Total	400	420	441	463	486

NA – not applicable, NP – not provided

SAN FRANCISCO PUBLIC UTILITIES COMMISSION

Agency Information		Service Area Information	
Address:	1155 Market Street San Francisco, CA 94103	**Service Area**	
		Population Served:	2,400,000
		Projected Population:	
Contact:	William Laws, Rate Administrator	**2010**	
Phone:	(415) 487-5251	**2015**	
Email/Website:	wlaws@sfwater.org www.sfwater.org	**2020**	
Type:	City (Public Utilities Commission)		

Agency Information	
No. of Employees:	593
Sources of Revenue	Service Charges (87%) Fees (2%) Rent (5%) Interest Income (3%) Misc. (3%)

Financial Information (FY 2002-2003) (in thousands)							
Revenues:	$170,640	**Expenses:**	$163,856	**Reserves:**	$16,297	**CIP:**	$23,080

Services Provided

- Provides treated and pre-treated imported water to 29 wholesale agencies in San Francisco Bay Area
- Wholesale Demand: 2000 = 171.3 MGD 2020 = 200.9 MGD
- Provides water to retail customers within City and County of San Francisco (not covered in this service review)
- $1.476 billion in regional CIP projects

BAY AREA WATER SUPPLY AND CONSERVATION AGENCY

Agency Information		Service Area Information	
Address:	155 Bovet Road, Suite 302 San Mateo, CA 94402	**Service Area**	460 sq. miles
		Population Served:	1,700,000
		Projected Population:	
Contact:	Arthur Jensen, General Manager	**2010**	
Phone:	(650) 349-3000	**2015**	
Email/Website:	ajensen@bawsca.org www.bawsca.org	**2020**	
Type:	Dependent Special District		

Agency Information	
No. of Employees:	5
Date of Formation	5/27/2003
Sources of Revenue	Member assessments (90%) Operating reserves (9%) Misc. (1%)

Financial Information (FY 2002-2003) (in thousands)							
Revenues:	$1,484	**Expenses:**	$1,291	**Reserves:**	$352	**CIP:**	$9.1

Services Provided

- Represents all 28 SFPUC water purchasers in Alameda, Santa Clara and San Mateo counties.
- Provides the following:
  Water Conservation, Water Contract Negotiation and Administration, Capital Improvement Program Oversight, Financial Analyses
- Provides administrative support for the San Francisco Bay Area Regional Water System Financing Authority
- Has authority to issue bonds